Technical Note 1972-5

M. E. Ash

Determination of Earth Satellite Orbits

19 April 1972

Prepared under Electronic Systems Division Contract F19628-70-C-0230 by

Lincoln Laboratory

MASSACHUSETTS INSTITUTE OF TECHNOLOGY

Lexington, Massachusetts

MASSACHUSETTS INSTITUTE OF TECHNOLOGY
LINCOLN LABORATORY

DETERMINATION OF EARTH SATELLITE ORBITS

M. E. ASH

Group 67

TECHNICAL NOTE 1972-5

19 APRIL 1972

LEXINGTON MASSACHUSETTS

The work reported in this document was performed at Lincoln Laboratory, a center for research operated by Massachusetts Institute of Technology, with the support of the Department of the Air Force under Contract F19628-70-C-0230.

ABSTRACT

The formulas used in a computer program to fit earth satellite orbits to data are documented. The areas covered are (1) iterative method of determining maximum likelihood parameter estimates; (2) units and coordinate systems; (3) motion of the earth about its center of mass; (4) equations for earth satellite motion and partial derivatives of this motion with respect to parameters; (5) theoretical values and partial derivatives of theoretical values of ground based (radar or radio transponder, look angles, long baseline interferometer) and satellite based (radar, look angles) observables; and (6) numerical techniques such as numerical integration, polynomial interpolation and matrix inversion. Observations of the sun, moon, planets and stars are also discussed.

Accepted for the Air Force
Joseph R. Waterman, Lt. Col., USAF
Chief, Lincoln Laboratory Project Office

TABLE OF CONTENTS

Table of Contents (Cont'd.)

Table of Contents (Cont'd.)

Table of Contents (Cont'd.)

I. INTRODUCTION

An orbit fitting computer program, called the Planetary Ephemeris Program (PEP), has been written at Lincoln Laboratory and the Massachusetts Institute of Technology. Since mid-1964 about 30 man (and woman) years of effort have been expended in coding the program. At the present time (late-1971) the program consists of 58,000 Fortran cards and runson any large IBM 360 computer with Operating System/360.

PEP uses double precision computations with 16 decimal place accuracy. The program needs about 110,000 thirty-two bit words of core storage with only part of the program in storage at any given time. At the start of a program run, every parameter is set to a default value and only those parameter values which differ from the default values need be input. For the most part PEP follows a modular design so that new features are easy to add to the already existing program.

PEP was originally designed to process observations of the sun, moon, planets and Mariner spacecraft. Efforts in these directions, originally initiated at Lincoln, continue at M.I.T. The efforts at Lincoln Laboratory have shifted to modifying the program to handle earth satellites.

In this note we document the formulas used in PEP to fit earth satellite orbits to ground based and satellite based observations. Much of what we say applies to processing solar system and star observations, and where feasible we expand our discussion to include the more general case.

A typical PEP computer run to fit earth satellite orbits to observations would be as follows. Given provisional values for earth satellite initial conditions and other parameters, PEP numerically integrates the equations of motion and the equations for the partial derivatives of motion with respect to initial conditions and other parameters for each individual satellite and writes the results on magnetic tape. For each observation PEP calculates the theoretical value of the observation and the partial derivatives of this theoretical value with respect to initial conditions and other parameters by interpolating from the ephemeris magnetic tapes. The errors of the observations are assumed to be additive and normally distributed with zero means and standard deviations the quoted errors. The observed minus theoretical values, the quoted errors and the partial derivatives of the theoretical values for the observations are used to form

the normal equations whose solutions give adjustments to the provisional values of the initial conditions and other parameters. Using these new values the process is repeated until convergence is obtained. The final values of the initial conditions and other parameters are the maximum likelihood estimates for these quantities arising from the given observations.

Our systematic documentation of the formulas used in PEP commences with a discussion of the iterative maximum likelihood method of parameter estimation. We then give a careful discussion of the units and coordinate systems used in PEP, including the effect of general relativity on the rate of an atomic clock. We discuss the presently accepted expressions for the motion of the earth about its center of mass, including wobble, rotation, nutation and precession.

In documenting the equations of earth satellite motion and the variational equations for the partial derivatives of this motion with respect to parameters, we thoroughly examine the Newtonian gravitational effects due to the $1/r^2$ attractions of the earth, sun, moon and planets and the effects of the higher harmonics in the gravitational potentials of the earth, moon and sun. We briefly discuss other effects on motion, such as those due to radiation pressure, etc.

The equations for earth-moon barycenter, moon and planet motion are documented in Refs. 1, 2 and 3, so we do not discuss them here. The formulas for the effect of central body gravitational potential harmonics as derived in this note for earth satellites apply to lunar and planetary orbiters as well if the expressions for the motion of the earth about its center of mass are replaced by those for the motion of the moon or planet about its center of mass. Expressions for the motion of the moon about its center of mass are contained in Ref. 1, Appendix B, and expressions for the motion of a planet about its center of mass are given at the end of this note (Section XI-A).

We discuss the formulas for the theoretical values and the partial derivatives of theoretical values for ground based observations of earth satellites including radar or radio transponder observations, azimuth-elevation and photographic observations, and long baseline interferometer observations. We extend our discussion of these observables to include solar system and star observations and add for the sake of completeness a discussion of meridian circle, transit and occultation observations.

We document formulas for the theoretical values and the partial derivatives of

theoretical values of satellite based observables, including satellite to satellite radar or radio transponder observations and satellite reference frame look angles of the earth, sun, stars and another satellite. For these satellite based observables we specifically consider the cases of the Lincoln Experimental Satellites numbers 8 and 9 (LES-8 and LES-9), which are to be launched in 1974. We also refer to LES-8/9 and to LES-6 (launched in 1968) when analyzing forces acting on satellites.

We discuss numerical analysis techniques used in PEP for numerical integration, polynomial interpolation, matrix inversion and recursive evaluation of Legendre polynomials and functions. We also discuss mean orbits for the moon and sun and planetary rotation and shape. Our desire in writing this note was to document the formulas used in PEP that were not already presented in Refs. 1, 2 and 3. New features are continually being added to PEP, so this documentation refers to the 1971 version of the program, but at least it should provide a basis for future expansion.

Some of the formulas and techniques discussed in this note are due to I. I. Shapiro, W. B. Smith and R. Reasenberg. We acknowledge their contributions at the appropriate places in the text. The programming of PEP from 1964 to 1971 was done at Lincoln Laboratory by the author, W. B. Smith, F. Amuchastegui, Katherine Becker, P. Connolly, Antonia Forni and Amanda Rasinski, and at M.I.T. by L. Friedman, R. Preston, R. Reasenberg, M. Slade, G. Slater, R. Cappallo, R. King and S. Synnott.

Because of the size of this Technical Note, it has been difficult to catch all the small errors, for which we apologize.

II. PARAMETER ESTIMATION

II-A. Method of Maximum Likelihood

Suppose we have observations $(0^1, \ldots, 0^m)$ with errors $(\varepsilon^1, \ldots, \varepsilon^m)$. We assume that the errors are additive, that is

$$0^i = C^i(\beta^1, \ldots, \beta^n) + \varepsilon^i \qquad i = 1, \ldots, m \tag{1}$$

where C^i is the computed value of the observation given the true values $(\beta^1, \ldots, \beta^n)$ of the parameters appearing in a mathematical model of the physical situation. We assume that the ε^i have a multivariate normal probability distribution with zero means and joint covariance mXm matrix N. Thus the joint probability density of the $\varepsilon^i = 0^i - C^i$ is

$$L = \frac{1}{(2\pi)^{m/2}(\det N)^{1/2}} e^{-\frac{1}{2}(0-C)^t N^{-1} (0-C)} \tag{2}$$

where $(0 - C)^t$ is the transpose of the column matrix $(0 - C)$, so that $(0 - C)^t = (0^1 - C^1, \ldots, 0^m - C^m)$. The joint density L is called the likelihood function. See Ref. 4, Chapter 9, for a discussion of the multivariate normal distribution.

One might imagine that the error of an observation is the sum of errors arising from a number of independent random causes. Then even if the distribution of these individual errors were not normal, their sum would tend to be normal by the central limit theorem. Even with this justification it is not necessarily true that the observational errors are normally distributed. But we proceed under the assumption that they are.

In general, the error of an observation has a random part and a systematic part. We assume that the systematic part has been modeled as a measurement bias with parameters to be estimated, so that we are left with only a normally distributed random error with zero mean.

One cannot determine the true values of the parameters $(\beta^1, \ldots, \beta^n)$ from the observations $(O^1, \ldots, O^n)$. It is even unclear what the word "true" means. However, one can determine estimates $(\hat{\beta}^1, \ldots, \hat{\beta}^n)$ of the parameters appearing in the physical model which are functions of the observations. The maximum likelihood estimators are the ones which maximize the likelihood function L in (2), i.e. which make the occurrence of the observed measurements most probable. Other estimators are possible, but the maximum likelihood estimators are often used and they have desirable properties.

If the values $(\hat{\beta}^1, \ldots, \hat{\beta}^m)$ of the parameters maximize the likelihood function L, we have

$$\frac{1}{2} (O - C)^t N^{-1} (O - C) = \text{minimum} \tag{3}$$

If the observation errors are uncorrelated, the covariance matrix N is diagonal with, say, ith diagonal element δ_i^2 and equation (3) becomes

$$\sum_{i=1}^{m} \frac{(O^i - C^i)^2}{\delta_i^2} = \text{minimum} \tag{4}$$

Thus the maximum likelihood estimators become the least squares estimators if the observation errors are uncorrelated. Note that equations (3) and (4) are dimensionless, so that we can mix different observable types with different units of measurement.

The way PEP is programmed at present assumes that the measurement errors are uncorrelated, so that PEP performs least squares fitting. More sophisticated filtering techniques might be programmed in the future. In this report we just discuss the least squares technique that has been used in celestial mechanics since the early nineteenth century.

The parameter estimators are functions of the observed random variables and hence are themselves random variables with a joint probability distribution. For a large number m of observations $(m >> n)$ the maximum likelihood parameter estimates are approximately normally distributed with means the true

values of the parameters and with covariance matrix the inverse of the matrix

$$A_{jk} = - E \left(\frac{\partial^2 \log L}{\partial \beta^j \partial \beta^k} \right) \qquad j,k = 1, \ldots, n \tag{5}$$

Here E denotes expectation, i.e., integration of the given function over the probability density of the observables. See Ref. 4, p. 236 and Ref. 5, pp. 498-505.

The left side of (4) is equal to $-2 \log L$ 'plus a constant. We therefore have

$$A_{jk} = \sum_{i=1}^{m} \frac{1}{\delta_i^{\,2}} \frac{\partial C^i}{\partial \beta^j} \frac{\partial C^i}{\partial \beta^k} \qquad j,k = 1, \ldots, n \tag{6}$$

since the expectation of $(O^i - C^i)$ is 0 . The covariance matrix of the parameter estimates is

$$\left(\sigma_{jk}\right) = \left(A_{jk}\right)^{-1} \tag{7}$$

The standard deviations of the parameter estimates are

$$\sigma_j = \sqrt{\sigma_{jj}} \quad , \qquad j = 1, \ldots, n \tag{8}$$

and the correlations between the parameter estimates are

$$\varepsilon_{jk} = \frac{\sigma_{jk}}{\sigma_j \sigma_k} \qquad j,k = 1, \ldots, n \tag{9}$$

II-B. Iterative Solution to the Likelihood Equations

We wish to determine parameter values $(\hat{\beta}^1, \ldots, \hat{\beta}^n)$ which minimize (4). At the minimum we have

$$\sum_{i=1}^{m} \frac{(O^i - C^i)}{\delta_i^{\,2}} \frac{\partial C^i}{\partial \beta^j}\bigg|_{\beta = \hat{\beta}} = 0 \qquad j = 1, \ldots, n \tag{10}$$

Suppose we have provisional values $(\beta_o^{\,1}, \ldots, \beta_o^{\,n})$ of the parameters and wish to determine the adjustments

$$\Delta\beta^k = \hat{\beta}^k - \beta_o^{\,k} \quad , \qquad k = 1, \ldots, k$$

which yield the maximum likelihood, or least squares, estimates. We make the linear assumptions

$$C^i(\hat{\beta}) = C^i(\beta_o) + \sum_{k=1}^{n} \Delta\beta^k \frac{\partial C^i}{\partial \beta^k}\bigg|_{\beta = \beta_o} \qquad i = 1, \ldots, m$$

$$\frac{\partial C^i}{\partial \beta^k}\bigg|_{\beta = \hat{\beta}} = \frac{\partial C^i}{\partial \beta^k}\bigg|_{\beta = \beta_o} \qquad i = 1, \ldots, m, \quad k = 1, \ldots, n$$

Substituting into (10) we obtain

$$\sum_{k=1}^{n} A_{jk}\, \Delta\beta^k = B_j \qquad j = 1, \ldots, n \tag{11}$$

where A_{jk} is given by (6) and B_j by

$$B_j = \sum_{i=1}^{m} \frac{(O^i - C^i)}{\delta_i^{\,2}} \frac{\partial C^i}{\partial \beta^j} \qquad j = 1, \ldots, n \tag{12}$$

Equations (11) are called the normal equations. The inverse of the coefficient matrix of the normal equations is the covariance matrix of the normally distributed parameter estimates if there is a large number m of observations. The solutions $\Delta\beta^k$ of the normal equations give adjustments to the provisional parameter values,

$$\hat{\beta}^k = \beta_o^{\ k} + \Delta\beta^k \quad , \qquad k = 1, \ldots, n \tag{13}$$

Because we have linearized the problem, it is necessary to iterate. Namely, using the new values of the parameters we reform the normal equations and solve them to get further adjustments to the parameters, the iteration continuing until we obtain convergence. We consider that we have converged if the adjustments to the parameters are a small fraction of the standard deviations (8) of the parameter estimates.

How do we know that we have not converged to a local minimum of (4) rather than to the absolute minimum? The only answer is that we do not. We have performed tests where we started from several different points far from the final parameter estimates and converged to the same solution. However, we cannot conclude that this will always be so, except that in all our experience we have gotten valid operational results using this technique.

II-C. Saved Partial Derivatives, Saved Normal Equations and Linear Prediction of Residuals

The computed value of an observation C^i needs to be calculated accurately in order to retain enough significant digits in $(O^i - C^i)$. However, the partial derivatives $\partial C^i/\partial\beta^j$ need not be calculated so accurately. One way to take advantage of this fact is to save the values of $\partial C^i/\partial\beta^j$ on magnetic tape from one iteration to the next rather than recalculating the partial derivatives each iteration. There is very extensive logic in PEP to do just this if desired with great savings in computer time. Another feature in PEP is the option of using analytic expressions for the partial derivatives with respect to initial conditions in the elliptic orbit osculating to the true orbit of a body rather than numerically integrating the equations for these partial derivatives in the

true orbit. This feature is very useful for planetary orbits, but it is only valid for a few revolutions in highly perturbed earth satellite orbits.

There is an option in PEP of saving the normal equations on magnetic tape so that additional solutions can be made with parameter subsets by just leaving out the appropriate rows and columns when reading the saved normal equations.

If one is near convergence it is not necessary to reintegrate the equations of motion and recompute the $(O^i - C^i)$. Rather, there is an option in PEP to predict the $(O^i - C^i)$ from the old $(O^i - C^i)_o$, the partial derivatives $\partial C^i/\partial \beta^j$ and the adjustments $\Delta\beta^j$ to the parameters with Taylor's theorem

$$(O^i - C^i) = (O^i - C^i)_o - \sum_{j=1}^{n} \frac{\partial C^i}{\partial \beta^j} \Delta\beta^j \tag{14}$$

If these predicted $(O^i - C^i)$ were inserted back in the normal equations, identically zero solutions would result. Thus, in order to converge in the least squares iteration it is necessary to reintegrate the equations of motion and recompute the $(O^i - C^i)$.

II-D. Automatic Scaling

Suppose we changed units or scale for the parameters $(\beta^1, \ldots, \beta^n)$ to get new parameters $(\beta_*^1, \ldots, \beta_*^n)$:

$$\left.\begin{aligned} \beta_*^j &= s_j \beta^j \\ \Delta\beta_*^j &= s_j \Delta\beta^j \\ \frac{\partial C^i}{\partial \beta_*^j} &= \frac{1}{s_j} \frac{\partial C^i}{\partial \beta^j} \quad i = 1, \ldots, n \end{aligned}\right\} \; j = 1, \ldots, n \tag{15}$$

The normal equations (11) become

$$\sum_{k=1}^{n} A_{jk}^{*} \Delta\beta_{*}^{k} = B_{j}^{*} \qquad j = 1, \ldots, n \tag{16}$$

where

$$\left.\begin{aligned} A_{jk}^{*} &= \frac{1}{s_j s_k} A_{jk} \\ B_{j}^{*} &= \frac{1}{s_j} B_j \end{aligned}\right\} \quad j, k = 1, \ldots, n \tag{17}$$

In the PEP the normal equations are formed with any convenient units for the parameters. As the equations stand they are very difficult to treat numerically with many orders of magnitude separating various coefficients in the coefficient matrix and right side. Therefore, PEP automatically scales the equations before sending them to the inversion and solution routine discussed in Section IX-C. The scale factors are chosen to be

$$s_j = \sqrt{A_{jj}} \qquad j = 1, \ldots, n \tag{18}$$

The new coefficient matrix (A_{jk}^{*}) has ones down the diagonal instead of quantities differing by many orders of magnitude. After solving the normal equations and inverting the coefficient matrix the adjustments and covariances for the parameter estimates in the old units are

$$\begin{aligned} \Delta\beta^{j} &= \frac{1}{s_j} \Delta\beta_{*}^{j} \\ \sigma_{jk} &= \frac{1}{s_j s_k} \sigma_{jk}^{*} \end{aligned} \tag{19}$$

II-E. Uncertainty of Prediction

Let $(\hat{\beta}^1, \ldots, \hat{\beta}^n)$ be the normally distributed (for large samples) maximum likelihood estimates of the orbital initial conditions and other parameters with covariance matrix (σ_{jk}). We can numerically integrate the equations of motion ahead in time and predict the theoretical value $\hat{\alpha}$ of an observable using the values $(\hat{\beta}^1, \ldots, \hat{\beta}^n)$ of the parameters with

$$\hat{\alpha} = \alpha(\hat{\beta}^1, \ldots, \hat{\beta}^n)$$

Since $\hat{\alpha}$ is a function of random variables, it is a random variable. Instead of solving for $(\hat{\beta}^1, \ldots, \hat{\beta}^n)$ in the least squares, maximum likelihood iterative process, we could have solved for $(\hat{\alpha}, \hat{\beta}^2, \ldots, \hat{\beta}^n)$. Thus, $\hat{\alpha}$ is normally distributed for large samples of the data to which we are fitting.

Let the true values of $\alpha, \beta^1, \ldots, \beta^n$ be $\bar{\alpha}, \bar{\beta}^1, \ldots, \bar{\beta}^n$ with

$$\bar{\alpha} = \alpha(\bar{\beta}^1, \ldots, \bar{\beta}^n)$$

If E denotes expectation, we have

$$E(\hat{\beta}^j) = \bar{\beta}^j$$

$$E(\hat{\alpha}) = \bar{\alpha}$$

$$E\left[\left(\hat{\beta}^j - \bar{\beta}^j\right)\left(\hat{\beta}^k - \bar{\beta}^k\right)\right] = \sigma_{jk}$$

We have

$$\hat{\alpha} = \bar{\alpha} + \sum_{j=1}^{n} \frac{\partial\alpha}{\partial\beta^j}\left(\hat{\beta}^j - \bar{\beta}^j\right) + \ldots$$

where $\partial\alpha/\partial\beta^j$ is evaluated at the point $(\beta^1, \ldots, \beta^n) = (\bar{\beta}^1, \ldots, \bar{\beta}^n)$.

Thus $\hat{\alpha}$ is approximately normally distributed with approximate covariance

$$E\left[\left(\hat{\alpha} - \bar{\alpha}\right)^2\right] = E\left(\hat{\alpha}^2\right) - E(\hat{\alpha})^2 \approx \sum_{j,k=1}^{n} \frac{\partial\alpha}{\partial\beta^j} \frac{\partial\alpha}{\partial\beta^k} \sigma_{jk}$$

where to sufficient accuracy we can evaluate the $\partial\alpha/\partial\beta^j$ at the point $(\beta^1, \ldots, \beta^n) = (\hat{\beta}^1, \ldots, \hat{\beta}^n)$.

Now suppose that

$$\hat{\alpha}^i = \alpha^i\left(\hat{\beta}^1, \ldots, \hat{\beta}^n\right) \quad i = 1, \ldots, q$$

are q random variables with expectations

$$E(\hat{\alpha}^i) = \bar{\alpha}^i = \alpha^i\left(\bar{\beta}^1, \ldots, \bar{\beta}^n\right) \quad i = 1, \ldots, q$$

The same argument as was used in the single random variable case gives that for large samples, $(\hat{\alpha}^1, \ldots, \hat{\alpha}^q)$ are jointly normally distributed with covariance matrix

$$\begin{aligned} \tau_{ab} &= E\left[\left(\alpha^a - \bar{\alpha}^a\right)\left(\alpha^b - \bar{\alpha}^b\right)\right] \\ &= E\left(\alpha^a\alpha^b\right) - E(\alpha^a)\, E(\alpha^b) \\ &\approx \sum_{j,k=1}^{n} \frac{\partial\alpha^a}{\partial\beta^j} \frac{\partial\alpha^b}{\partial\beta^k} \sigma_{jk} \end{aligned}$$

where the partial derivatives $\partial\alpha^a/\partial\beta^j$ should be evaluated at the point $(\beta^1, \ldots, \beta^n) = (\bar{\beta}^1, \ldots, \bar{\beta}^n)$, except that with sufficient accuracy we can evaluate them at the point $(\beta^1, \ldots, \beta^n) = (\hat{\beta}^1, \ldots, \hat{\beta}^n)$.

Let (r_{ab}) be the inverse of the covariance matrix (τ_{ab}),

$$(r_{ab}) = (\tau_{ab})^{-1}$$

According to Ref. 4, pp. 244 and 264, the quantity

$$\hat{u} = \sum_{a,b=1}^{q} r_{ab}(\hat{\alpha}^a - \bar{\alpha}^a)\ (\hat{\alpha}^b - \bar{\alpha}^b)$$

has the chi-square distribution with q degrees of freedom. Let P denote probability and let p be a number between 0 and 1, say $p = 0.95$. Let λ be such that

$$P(\hat{u} < \lambda) = p$$

We determine λ from a table of the chi-square distribution with q degrees of freedom. Then with probability p the true value $(\bar{\alpha}^1, \ldots, \bar{\alpha}^q)$ of the vector $(\alpha^1, \ldots, \alpha^q)$ lies within the ellipsoid

$$\sum_{a,b=1}^{q} r_{ab}\ (\hat{\alpha}^a - \alpha^a)\ (\hat{\alpha}^b - \alpha^b) \leq \lambda$$

with center at $(\hat{\alpha}^1, \ldots, \hat{\alpha}^q)$.

As an example, $(\hat{\alpha}^1, \hat{\alpha}^2, \hat{\alpha}^3)$ might be the estimate of the position of a body at a given time. The above formulas give the error ellipsoid about this estimate. Confidence intervals about the estimate of a single variable $\hat{\alpha}$ can be determined from tables of the normal distribution as well as from tables of the chi-square distribution with 1 degree of freedom.

III. UNITS AND COORDINATE SYSTEMS

III-A. Units of Mass, Length and Time

Any physical theory has unknown parameters. Some of the parameters are set to defined values in order to specify units and the remainder are determined by fitting to data.

In processing planetary observations with PEP, we set the mass of the sun $M_s = 1$ to define the unit of mass and set the square root of the gravitational constant γ to the Gaussian value

$$\sqrt{\gamma M_s} = 0.01720209895 \quad L^{3/2}T^{-1} \tag{20}$$

which specifies the unit of length (the Astronomical Unit) once the unit of time, the Coordinate, or Ephemeris, Day, is defined. If our physical model allowed a time variation of the gravitational constant with

$$\gamma M_s = (\gamma M_s)_o \left[1 + \lambda(t - t_*)\right] \tag{21}$$

we would set $\sqrt{(\gamma M_s)_o}$ to the defined value (20). Any such variation would be less than a part in 10^{10} per year. The fractional variation in the mass of the Sun is completely negligible.

Continuously since 1956, the U.S. Naval Observatory has had one or more cesium atomic clocks running which define what is called A1 Atomic Time. In recent years there have been 16 or more cesium clocks running whose average has been the measure of A1 time. The A1 second is defined such that the cesium transition at zero magnetic field has the precise frequency (see Ref. 6, p. 446)

$$9192631770 \quad \text{cyles/second} \tag{22}$$

The day consists of 86,400 seconds and we define Coordinate Time CT (the independent variable of the equations of motion) in terms of A1 Atomic Time by (see Ref. 7, p. vii)

$$CT = A1 + 32\overset{s}{.}15 \tag{23}$$

The defined frequency (22) and offset $32\overset{s}{.}15$ in (23) were chosen to have Coordinate Time agree as closely as could be observed with previous definitions of Ephemeris Time.

We define

$$\begin{aligned} M_s &= \text{mass of sun} \\ M_e &= \text{mass of earth} \\ M_m &= \text{mass of moon} \\ M_c &= M_e + M_m \end{aligned} \tag{24}$$

In processing planetary and Mariner space probe data it has been determined that[8,9]

$$\text{Astronomical Unit} = 499.004780 \pm 1 \times 10^{-6} \text{ light seconds}$$

$$\begin{aligned} M_s/M_c &= 328900.1 \pm .4 \\ M_c/M_m &= 82.301 \pm .001 \end{aligned} \tag{25}$$

We assume that

$$c = \text{velocity of light} = 2.997925 \times 10^5 \text{ km/sec} \tag{26}$$

These values and definition (20) imply that

$$\gamma M_e = 398601.177 \pm 0.55 \text{ km}^3/\text{sec} \tag{27}$$

which gives the relation between our system of units and those used in other orbit fitting computer programs which set γM_e to a defined value instead of

γM_s . In particular the Smithsonian Astrophysical Observatory in Ref. 10 uses the defined value

$$\gamma M_e = 398601.3 \text{ km}^3/\text{sec}^2 \tag{28}$$

The parameter values obtained from fitting to data with the Smithsonian computer program would differ very slightly from that obtained with PEP because of the difference in definition of units. However, the fit to the data would be the same. (See the discussion surrounding (102) in Section V-B.)

The particular definitions for the units of mass, length and time used in PEP arise from the fact that it is a solar system program specialized to work for earth satellites.

III-B. Effect of General Relativity on Time

The theory of General Relativity alters equation (23) slightly. Namely, in general relativity the space time universe is pictured to be a four dimensional differentiable manifold with a second order symmetric hyperbolic tensor defining the gravitational potential. In a local coordinate system (x^o, x^1, x^2, x^3) this tensor, called the metric tensor, has the form

$$ds^2 = g_{\mu\nu} dx^\mu \otimes dx^\nu \tag{29}$$

where we follow the Einstein summation convention that repeated upper and lower indices are summed. The equation of motion of the bodies in the solar system are derived with coordinate time $t = x^o$ as independent variable. Let $x^\mu = x^\mu(t)$ be the time-like world line followed by an atomic clock on the earth. Then the proper time elapsed from coordinate time t_o to coordinate time t_1 along this world line is defined to be

$$\tau_{o1} = \int_{t_o}^{t_1} \sqrt{g_{\mu\nu} \frac{dx^\mu}{dt} \frac{dx^\nu}{dt}} \tag{30}$$

and the atomic time AT elapsed from t_o to t_1 is

$$AT_1 - AT_o = \lambda\tau_{o1} \tag{31}$$

where the constant λ depends on the units chosen. Equation (31) states that atomic time is uniform relative to proper time.

In Ref. 11, pp. 168-171, the Newtonian approximation to the metric tensor is stated to be

$$ds^2 = (c^2 + 2U)\, dt^2 - (dx^1)^2 - (dx^2)^2 - (dx^3)^2 \tag{32}$$

where U is the Newtonian gravitational potential with the convention that the force is $-\overrightarrow{\text{Grad } U}$ and where c is the velocity of light. Let v be the velocity on the world line,

$$v^2 = \sum_{j=1}^{3} \left(\frac{dx^j}{dt}\right)^2 \tag{33}$$

We then have

$$\begin{aligned} AT_1 - AT_o &= \lambda c \int_{t_o}^{t_1} \sqrt{1 + \frac{2U}{c^2} - \frac{v^2}{c^2}}\, dt \\ &\approx \lambda c \int_{t_o}^{t_1} \left[\left(1 + \frac{Uo}{c^2} - \frac{1}{2}\frac{v_o^2}{c^2}\right)\right. \\ &\quad \left. + \left(\frac{U}{c^2} - \frac{Uo}{c^2}\right) - \frac{1}{2}\left(\frac{v^2}{c^2} - \frac{v_o^2}{c^2}\right)\right] dt \end{aligned} \tag{34}$$

where U_o, v_o are the average values of the gravitational potential and velocity of the atomic clock on the earth as it orbits the sun. We define coordinate time in terms of atomic time by this equation, where the atomic unit of time is specified by (22). In defining the unit of coordinate time we are free to set a constant to a defined value, so we specify

$$\lambda = \frac{1}{c\left(1 + \frac{U_o}{c^2} - \frac{1}{2}\frac{v_o^2}{c^2}\right)} \tag{35}$$

and obtain

$$AT_1 - AT_o = CT_1 - CT_o + \frac{1}{1 + \frac{U_o}{c^2} - \frac{1}{2}\frac{v_o^2}{c^2}} \int_{t_o}^{t_1} \left[\left(\frac{U}{c^2} - \frac{U_o}{c^2}\right) - \frac{1}{2}\left(\frac{v^2}{c^2} - \frac{v_o^2}{c^2}\right)\right] dt \tag{36}$$

The general relativity expression includes the special relativity term involving the variation in velocity environment of the atomic clock plus the equally important term involving the variation in gravitational potential environment of the atomic clock.

The earth-moon barycenter moves approximately in an ellipse of eccentricity $e = .01672$ relative to the Sun with semi-major axis $a = 1$ astronomical unit. In this elliptic orbit we have

$$\begin{aligned} r &= \frac{a(1-e^2)}{1-e\cos\psi} \\ v^2 &= \gamma M_s \left(\frac{2}{r} - \frac{1}{a}\right) \\ v &= -\frac{\gamma M_s}{r} \end{aligned} \tag{37}$$

where ψ is the mean anomaly related to the time t from perihelion by

$$\tan\frac{\psi}{2} = \sqrt{\frac{1+e}{1-e}}\,\tan\frac{\xi}{2}$$

$$\frac{2\pi t}{T} = \xi - e\sin\xi \tag{38}$$

$$\frac{d\psi}{dt} = \frac{\sqrt{\gamma M_s}\,\sqrt{a(1-e^2)}}{r^2}$$

where ξ is the eccentric anomaly and $T \approx 365.25$ days is the period.

Consider the integral*

$$\int_{t_o}^{t_1}\left[\frac{U}{c^2} - \frac{1}{2}\frac{v^2}{c^2}\right] dt$$

$$= \frac{\gamma M_s}{a(1-e^2)c^2}\int_{t_o}^{t_1}\left[\frac{1-e^2}{2} - 2\,(1 - e\cos\psi)\right] dt$$

$$= \frac{\sqrt{\gamma M_s}\,\sqrt{a(1-e^2)}}{c^2}\int_{\psi(t_o)}^{\psi(t_1)}\frac{\left(-\frac{3}{2} - \frac{e^2}{2} + 2\,e\cos\psi\right)}{(1 - e\cos\psi)^2}\,d\psi$$

$$\approx \frac{\sqrt{\gamma M_s}\,\sqrt{a(1-e^2)}}{c^2}\int_{\psi(t_o)}^{\psi(t_1)}\left(-\frac{3}{2} - \frac{e^2}{2} + 2\,e\cos\psi\right)\cdot$$

$$\cdot\left(1 + 2\,e\cos\psi + 3\,e^2\cos^2\psi + 4\,e^3\cos^3\psi\right) d\psi$$

---

* Note added in proof: If we had evaluated this and subsequent integrals in terms of the eccentric anomaly ξ we would have obtained exact results without expanding in powers of e.

$$\approx \frac{\sqrt{\gamma M_s}\sqrt{a(1-e^2)}}{c^2} \int_{\psi(t_o)}^{\psi(t_1)} \left[\left(-\frac{3}{2} - \frac{e^2}{2}\right)\right.$$

$$\left. - (e + e^3)\cos\psi - \frac{e^2}{2}\cos^2\psi\right] d\psi$$

where we have ignored powers of e higher than the third. Let us take $\frac{U_o}{c^2} - \frac{1}{2}\frac{v_o^2}{c^2}$ to be the average of this integral, ξ, i.e., the integral form 0 to 2π divided by the orbital period T of the earth:

$$\frac{U_o}{c^2} - \frac{1}{2}\frac{v_o^2}{c^2} = \frac{\sqrt{\gamma M_s}\sqrt{a(1-e^2)}}{c^2}\,\frac{2\pi}{T}\left[-\frac{3}{2} - \frac{3e^2}{4}\right]$$

$$= -\frac{\sqrt{(\gamma M_s)}\sqrt{1-e^2}}{ac^2}\left[\frac{3}{2} + \frac{3e^2}{4}\right]$$

$$\approx -\frac{3(\gamma M_s)}{2ac^2} \approx -10^{-8} \quad \text{(dimensionless)} \tag{39}$$

since

$$\frac{2\pi}{T} = (\gamma M_s)^{1/2}\, a^{-3/2} \tag{40}$$

We are using the combined average of $\frac{U_o}{c^2} - \frac{1}{2}\frac{v_o^2}{c^2}$ rather than the average of each individual term, but the end result is the same.

The term multiplying the integral in (36) differs from 1 in the eighth place, so we take it to be 1 . Thus (36) can be written as

$$(CT_1 - CT_o) - (AT_1 - AT_o) =$$

$$\frac{\gamma M_s}{ac^2} \int_{t_o}^{t_1} \left[\frac{2(1 - e \cos \psi)}{(1 - e^2)} - 2 \right] dt$$

$$\approx \frac{\sqrt{\gamma M_s}\, a^{1/2} (1 - e^2)^{3/2}}{c^2} \int_{\psi(t_o)}^{\psi(t_1)} \left[2e^2 - 2 (e + e^3) \cos \psi \right] \cdot$$

$$\cdot \left[1 + 2 e \cos \psi + 3 e^2 \cos^2 \psi + 4 e^3 \cos^3 \psi \right] d\psi$$

$$\approx \frac{\sqrt{\gamma M_s}\, a^{1/2} (1 - e^2)^{3/2}}{c^2} \int_{\psi(t_o)}^{\psi(t_1)} \left[2e^2 - 2(e + e^3) \cos \psi \right.$$

$$\left. - 4e^2 \cos^2 \psi - 6e^3 \cos^3 \psi \right] d\psi$$

$$= \frac{\sqrt{\gamma M_s}\, a^{1/2} (1 - e^2)^{3/2}}{c^2} \left[- 2(e + e^3) \sin \psi - e^2 \sin 2 \psi \right.$$

$$\left. - 6e^3 \sin \psi (\cos^2 \psi + 2) \right] \Bigg|_{\psi = \psi(t_o)}^{\psi = \psi(t_1)}$$

where we have ignored powers of e higher than the third. Over one revolution the right side is zero as it should be.

Inserting numerical values for the constants in the above formula, equation (23) becomes in general relativity

$$CT = A1 + 32\overset{s}{.}15 - 1\overset{s}{.}6576 \times 10^{-3} \sin \psi$$

$$- 1\overset{s}{.}38 \times 10^{-5} \sin 2\psi - 1\overset{s}{.}4 \times 10^{-6} \sin \psi (\cos^2 \psi + 2) \tag{41}$$

where by Ref. 12, p. 77, the true anomaly ψ is expressed in terms of the fraction of time $\frac{t}{T}$ from perihelion by

$$\psi = 2\pi \frac{t}{T} + \left[2e - \frac{1}{4} e^3 + \ldots\right] \sin \left(2\pi \frac{t}{T}\right)$$

$$+ \left[\frac{5}{4} e^2 - \frac{11}{24} e^4 + \ldots\right] \sin \left(4\pi \frac{t}{T}\right) + \left(\frac{13}{12} e^3 - \ldots\right) \sin\left(6\pi \frac{t}{T}\right)$$

$$+ \ldots$$

$$\approx 2\pi \frac{t}{T} + 0.0333988 \sin \left(2\pi \frac{t}{T}\right) + 0.0003489 \sin \left(4\pi \frac{t}{T}\right)$$

$$+ 0.0000050 \sin \left(6\pi \frac{t}{T}\right) \tag{42}$$

Alternately, Keplers equation (38) could be solved iteratively for ψ given $M = 2\pi \frac{t}{T}$. The earth-moon barycenter perihelion occurs about January 3 each year.

The above formula is not programmed in PEP, but rather an interpolation is performed from a tabulation (see Table I) constructed in the following manner. The integral (30) was numerically integrated with the Newtonian approximation (32) and with the exact earth-moon barycenter orbit instead of an elliptic orbit approximation. The integration was performed to produce a table for about a decade surrounding the present time. An appropriate value of λ in (31) was chosen so as to obtain (23) with small additional oscillatory values. The table was much the same from one year to the next, so we essentially

TABLE I

VARIATION IN CT-(A1 + 32.15) VERSUS FRACTION OF SIDEREAL YEAR

Fraction of Year	CT-(A1 + 32.15) millisec	Fraction of Year	CT-(A1 + 32.15) millisec
- 0.01	0.1056	0.50	- 0.1396
0.00	- 0.0000	0.51	- 0.0372
0.01	- 0.1058	0.52	0.0650
0.02	- 0.2115	0.53	0.1667
0.03	- 0.3166	0.54	0.2676
0.04	- 0.4206	0.55	0.3671
0.05	- 0.5233	0.56	0.4650
0.06	- 0.6240	0.57	0.5609
0.07	- 0.7225	0.58	0.6544
0.08	- 0.8183	0.59	0.7452
0.09	- 0.9111	0.60	0.8329
0.10	- 1.0003	0.61	0.9172
0.11	- 1.0857	0.62	0.9978
0.12	- 1.1670	0.63	1.0743
0.13	- 1.2438	0.64	1.1464
0.14	- 1.3158	0.65	1.2139
0.15	- 1.3827	0.66	1.2765
0.16	- 1.4442	0.67	1.3339
0.17	- 1.5002	0.68	1.3859
0.18	- 1.5504	0.69	1.4323
0.19	- 1.5946	0.70	1.4729
0.20	- 1.6327	0.71	1.5075
0.21	- 1.6645	0.72	1.5360
0.22	- 1.6900	0.73	1.5582
0.23	- 1.7089	0.74	1.5740
0.24	- 1.7214	0.75	1.5834
0.25	- 1.7273	0.76	1.5863
0.26	- 1.7267	0.77	1.5826
0.27	- 1.7195	0.78	1.5724
0.28	- 1.7059	0.79	1.5557
0.29	- 1.6859	0.80	1.5324
0.30	- 1.6595	0.81	1.5028
0.31	- 1.6270	0.82	1.4669
0.32	- 1.5884	0.83	1.4247
0.33	- 1.5440	0.84	1.3766
0.34	- 1.4939	0.85	1.3225
0.35	- 1.4383	0.86	1.2629
0.36	- 1.3775	0.87	1.1978
0.37	- 1.3117	0.88	1.1275
0.38	- 1.2411	0.89	1.0523
0.39	- 1.1661	0.90	0.9726
0.40	- 1.0869	0.91	0.8885
0.41	- 1.0039	0.92	0.8005
0.42	- 0.9173	0.93	0.7089
0.43	- 0.8276	0.94	0.6141
0.44	- 0.7350	0.95	0.5164
0.45	- 0.6398	0.96	0.4163
0.46	- 0.5426	0.97	0.3142
0.47	- 0.4436	0.98	0.2105
0.48	- 0.3431	0.99	0.1056
0.49	- 0.2417	1.00	- 0.0000

obtained formula (41) more exactly with a table look-up instead of evaluating trigonometric terms.

Specifically, the programming in PEP to utilize Table I is as follows. Given the Coordinate Julian Date (call it JED) we calculate the fraction of coordinate time t_f from the beginning of year by

$$t_f = (\text{JED} - 2439491.5)/365.2563604 \tag{43}$$

where JED 2439491.5 is 1.0 January 1967 and 365.2563604 is the length of the sidereal year in days. Using the fraction of year t_f the value of $CT - (A1 + 32.15)$ is determined by interpolation from Table I. Given an atomic time epoch instead of a coordinate time epoch, an iterative process determines $CT - (A1 + 32.15)$ from the table. The zero crossing in Table I is slightly offset from the zero crossing at perihelion in (41), but this does not operationally matter as long as the same convention is used consistently all the time.

This formulation ignores a number of effects in the variation of the rate of atomic time relative to coordinate time. To see how large these can be suppose there is a variation in the gravitation potential and velocity environment (divided by c^2) of maximum magnitude D and period τ. We have

$$D\int_0^t \cos\left(\frac{2\pi t}{\tau}\right) dt = \frac{D\tau}{2\pi} \sin\left(\frac{2\pi t}{\tau}\right) \tag{44}$$

so that the longer the period for a given magnitude phenomenon the larger the cumulative effect.

Because of the motion of the earth about the earth-moon barycenter, v^2/c^2 differs from v_o^2/c^2 by as much as $\pm 8.3 \times 10^{-12}$ and U/c^2 differs from U_o/c^2 by as much as $\pm 3.1 \times 10^{-13}$ (this last is entirely due to the gravitational potential of the sun). In addition, because of the eccentricity of the Moon's orbit about the earth, U/c^2 differs from U_o/c^2 by as much as $\pm 7.8 \times 10^{-15}$ due to the moon. Thus general relativity predicts an additional term in (41) of period one lunar month and amplitude 2.2×10^{-7} seconds.

Because of the rotation of the earth v^2/c^2 differs from v_o^2/c^2 by as much as $\pm 3.1 \times 10^{-10} \cos \phi$, where ϕ is the latitude of the atomic clock, and U/c^2 differs from U_o/c^2 by as much as $\pm 4.3 \times 10^{-13} \cos \phi$ due to the sun and $\pm 2.4 \times 10^{-15} \cos \phi$ due to the moon. Thus general relativity predicts an additional term in (41) of period one sidereal day and amplitude $4.3 \times 10^{-6} \cos \phi$ seconds.

The non-informity between atomic time and coordinate time predicted by general relativity affects the theoretical value of an observation in (i) the actual measurement and (ii) the specification of epoch.

If an observation involves a measurement of time delay, effect (i) enters into the conversion of the theoretical value of the measurement from coordinate time CT to atomic time Al . If the time delay in coordinate time were Δt, the atomic time delay would differ from it by at most $\alpha \Delta t$, where α (dimensionless) is the maximum rate of change in the periodic variations in CT − Al.

In the case of the yearly term due to the eccentricity of the earth-moon barycenter orbit, we have $\alpha = 3.3 \times 10^{-10}$. For an interplanetary round trip time delay measurement of magnitude $\Delta t \approx 1000$ seconds, this effect could be as large as 0.33 μsec, so it can be important. For observations of earth satellites with $\Delta t \approx 1$ second, this effect can be ignored, except for as yet unobtained subnanosecond round trip time delay accuracies.

In the case of the monthly term due to the motion of the earth relative to the earth-moon barycenter, we have $\alpha = 5.9 \times 10^{-13}$. This effect (i) on a delay measurement is unimportant for both interplanetary and earth satellite observations.

In the case of the diurnal term due to the rotation of the earth, we have $\alpha = 3.1 \times 10^{-10}$. Thus effect (i) on an earth satellite time delay measurement is unimportant, but it can be as large as 0.31 μsec for a 1000 second interplanetary round trip time delay measurement. We do not pursue the accurate inclusion of this effect into PEP since this report is mainly directed toward earth satellites.

Effect (ii) enters into the calculation of the theoretical value of an observation in-so-far as the theoretical value of an observation is changed by a change in coordinate time epoch of the observation. We again consider

time delay observations Δt, since they are potentially one of the most accurate. The maximum possible effect is $D\dot{\Delta t}$ where D is the magnitude of the general relativity periodic term in CT-A1 and $\dot{\Delta t}$ is the rate of change of time delay except for that part due to the rotation of the earth. In the case of an interplanetary time delay measurement $|\dot{\Delta t}| \lesssim 2 \times 10^{-4}$ sec/sec so this effect can be important for the yearly term of magnitude $1\overset{s}{.}7 \times 10^{-3}$ due to the eccentricity of the earth orbit. However, this is not so for the case of earth satellite observations, except for super accurate observations. The monthly and diurnal variations in epoch are unimportant for both interplanetary and earth satellite observations.

There is a variation in $(\text{CT-A1} + 32\overset{s}{.}15)$ at the microsecond level with period 1.09 years due to the variation in Jupiters gravitational potential at the earth. This effect and those due to the fact that the earth-moon barycenter orbit does not follow exactly the same elliptical path from year to year are ignorable with present observable accuracies.

III-C. U.S. Naval Observatory Time Service

The time used in specifying the epoch of an observation is usually UTC time signal time, which is disseminated by the U.S. Naval Observatory WWV radio station (a "coordinate station"), by other time service ("coordinate") stations, and by the Loran-C system. In addition, portable cesium or rubidium atomic clocks are carried from Washington, D. C. to various sites to check the relation between the UTC clock at the Naval Observatory and the local site clock.

It is attempted to keep UTC time in fairly close accord with the UT2 time defined by the rotation of the earth (see Section III-D). Before 1.0 January 1972 this was accomplished by jumps in the clock reading and by changing the rate of the clock. After 1.0 January 1972 the UTC clock rate will be kept at the A1 clock rate (22) and one second quantum jumps (leap seconds) will be made. Table II gives the history of the frequency offset of the UTC clock from the A1 clock and Table III gives the history of the quantum jumps in the UTC clock as given in the U.S. Naval Observatory Time Service Notices and Bulletins. Table IV gives the relation between A1 and UTC times

TABLE II					
Fractional Frequency Offset of UTC from A1 in Units of 10^{-10}					
	Jan 1956	to		Aug 1957	varied between - 36 and -98
	Aug 1957	to		Dec 1958	varied between - 83 and - 127
1.0	Jan 1960	to	32.0	Dec 1959	varied between - 92 and - 112
1.0	Jan 1960	to	32.0	Dec 1961	- 150
1.0	Jan 1962	to	32.0	Dec 1963	- 130
1.0	Jan 1964	to	32.0	Dec 1965	- 150
1.0	Jan 1966	to	32.0	Dec 1971	- 300
1.0	Jan 1972	to	....	.....	0

from 1956 to the present as given on punched cards supplied by the U.S. Naval Observatory. From 1.0 January 1966 to 32.0 December 1971 this relation is given by*

$$\begin{aligned} A.1 - UTC = {} & 6.2398697 + 0.002592\,t \\ & + 0.0007 \text{ if between 1.0 Jan 1966 and 1.0 Dec 1966} \\ & + 0.0 \text{ if between 1.0 Dec 1966 and 1.0 Feb 1968} \\ & - 0.1 \text{ if between 1.0 Feb 1968 and 32.0 Dec 1971} \end{aligned} \tag{45}$$

where t is the time in A1 or UTC days from 1.0 January 1968 (Julian Date 2439856.5). After 1.0 January 1972 we will have

$$A1 - UTC = \text{constant (see end of Table IV)} \tag{46}$$

---

* Private Communication from R. G. Hall, Assistant Director of Time Service Division, U.S. Naval Observatory (20 May 1969). Before 1968 the formula could be off by a few tenths of a millisecond. More recently, the formula is more accurate than the number of digits in Table IV.

TABLE III

QUANTUM JUMPS IN A1-UTC

(The Julian Day Number is the Julian Date at noon on the given Greenwich calendar day; see Ref. 7, Table I, pp. 493-495)

Julian Day Number	Year	Month	Day	UTC Hr	Amount of Jump (sec)
2435477	1956	Jan	04	19	0.061
2435540		March	07	19	-0.020
2435561		March	28	19	-0.020
2435681		July	26	19	0.020
2435708		Aug	22	19	0.020
2435736		Sept	19	19	0.020
2435778		Oct	31	19	0.020
2435792		Nov	14	19	0.020
2435862	1957	Jan	23	19	0.020
2435911		Mar	13	19	0.020
2435960		May	01	19	0.020
2435995		June	05	19	0.020
2436009		June	19	19	0.020
2436023		July	03	19	0.020
2436037		July	17	19	0.020
2436065		Aug	14	19	0.020
2436128		Oct	16	19	0.020
2436149		Nov	06	19	0.020
2436184		Dec	11	19	0.020
2436219	1958	Jan	15	19	0.020
2436240		Feb	05	19	0.020
2436254		Feb	19	19	0.020
2436303		April	09	19	0.020
2436366		June	11	19	0.020
2436387		July	02	19	0.020
2436401		July	16	19	0.020
2436499		Oct	22	19	0.020
2436534		Nov	26	19	0.020
2436562		Dec	24	19	0.020
2436597	1959	Jan	28	19	0.020
2436625		Feb	25	19	0.020
2436786		Aug	05	19	0.020
2436807		Aug	26	19	0.020
2436842		Sept	30	19	0.020
2436877		Nov	04	19	0.020
2436891		Nov	18	19	0.020
2436919		Dec	16	19	0.020
2437301	1961	Jan	01	00	0.005
2437513		Aug	01	00	-0.050
2438335	1963	Nov	01	00	0.100
2438487	1964	April	01	00	0.100
2438640		Sept	01	00	0.100
2438670		Oct	01	00	0.001
2438762	1965	Jan	01	00	0.100
2438821		March	01	00	0.100
2438943		July	01	00	0.100
2439005		Sept	01	00	0.100
2439461	1966	Dec	01	00	-0.0007
2439888	1968	Feb	01	00	-0.100
2441318	1972	Jan	01	00	0.1076

After 1 Jan 1972 there will be 1 second quantum jumps every 6 months or a year.

where the constant will be incremented by 1 second every 6 months or a year to keep UTC within $0^s.7$ of UT2.

In PEP the value of A1 − UTC for processing observations is determined by a computer subroutine which before 1.0 January 1966 performs linear interpolation from the 10 day tabular interval table given in Table IV taking account of quantum jumps and which after that date uses formulas (45) and (46).

In recent years A1 time (being the average of about 16 cesium atomic clocks) has had a long term accuracy of 1 part in 10^{13}, which means that the A1 time which has elapsed between two epochs separated by a year is known to 3 μsec seconds. See Ref. 13.

A hydrogen maser atomic clock has an accuracy of 1 part in 10^{14}. However, the rate of the clock is not reproducible as it is for cesium clocks. Therefore, cesium clocks are used as the continuous time standard. Hydrogen maser clocks must be used in making super accurate observation measurements such as with very long baseline interferometry and round trip time delay, but it is then necessary to solve for observation biases when fitting to data. This is quite possible, and might even be done anyway. We might note that a hydrogen maser atomic clock costs about $100,000 whereas a cesium atomic clock costs about $10,000.

A local time standard is usually running at the rate of the UTC clock. Therefore, delay measurements, as in radar or radio transponder observations, is in UTC time units. The theoretical value of a delay measurement computed from the tables of motion of a satellite are in CT time units which is then converted to A1 time units. Before 1.0 January 1972 the theoretical value must in addition be multiplied by

$$1 - \text{fractional frequency offset} \tag{47}$$

in order to compare it with the observed value in UTC time units.

TABLE IV

DATA FROM U.S. NAVAL OBSERVATORY TIME SERVICE PUNCHED CARDS

JULIAN DATE	CALENDAR DATE	WOBBLE (") X	WOBBLE (") Y	A1-UTC SEC	A1-UT1 SEC	UT2-UT1 SEC
2435479.5	7.0 JAN 1956	0.035	0.331	-0.8188	-0.7998	-0.0102
2435489.5	17.0 JAN 1956	0.088	0.325	-0.8050	-0.7920	-0.0089
2435499.5	27.0 JAN 1956	0.126	0.320	-0.7918	-0.7847	-0.0075
2435509.5	6.0 FEB 1956	0.155	0.315	-0.7796	-0.7764	-0.0058
2435519.5	16.0 FEB 1956	0.177	0.310	-0.7669	-0.7664	-0.0034
2435529.5	26.0 FEB 1956	0.200	0.310	-0.7539	-0.7563	-0.0003
2435539.5	7.0 MAR 1956	0.224	0.310	-0.7425	-0.7449	0.0035
2435549.5	17.0 MAR 1956	0.240	0.310	-0.7521	-0.7328	0.0080
2435559.5	27.0 MAR 1956	0.238	0.293	-0.7410	-0.7204	0.0131
2435569.5	6.0 APR 1956	0.232	0.274	-0.7514	-0.7073	0.0184
2435579.5	16.0 APR 1956	0.223	0.250	-0.7433	-0.6947	0.0236
2435589.5	26.0 APR 1956	0.218	0.220	-0.7361	-0.6821	0.0282
2435599.5	6.0 MAY 1956	0.216	0.184	-0.7291	-0.6691	0.0320
2435609.5	16.0 MAY 1956	0.214	0.144	-0.7223	-0.6576	0.0344
2435619.5	26.0 MAY 1956	0.212	0.104	-0.7155	-0.6477	0.0352
2435629.5	5.0 JUN 1956	0.210	0.068	-0.7087	-0.6397	0.0342
2435639.5	15.0 JUN 1956	0.207	0.043	-0.7011	-0.6329	0.0315
2435649.5	25.0 JUN 1956	0.204	0.025	-0.6944	-0.6278	0.0270
2435659.5	5.0 JUL 1956	0.200	0.013	-0.6896	-0.6241	0.0211
2435669.5	15.0 JUL 1956	0.195	0.001	-0.6855	-0.6213	0.0141
2435679.5	25.0 JUL 1956	0.185	-0.003	-0.6821	-0.6193	0.0065
2435689.5	4.0 AUG 1956	0.167	0.001	-0.6582	-0.6168	-0.0013
2435699.5	14.0 AUG 1956	0.146	0.006	-0.6552	-0.6142	-0.0086
2435709.5	24.0 AUG 1956	0.123	0.014	-0.6325	-0.6103	-0.0152
2435719.5	3.0 SEP 1956	0.099	0.024	-0.6309	-0.6057	-0.0206
2435729.5	13.0 SEP 1956	0.077	0.025	-0.6279	-0.6002	-0.0246
2435739.5	23.0 SEP 1956	0.062	0.026	-0.6034	-0.5934	-0.0271
2435749.5	3.0 OCT 1956	0.049	0.027	-0.5984	-0.5845	-0.0281
2435759.5	13.0 OCT 1956	0.013	0.035	-0.5938	-0.5740	-0.0277
2435769.5	23.0 OCT 1956	-0.027	0.043	-0.5907	-0.5633	-0.0264
2435779.5	2.0 NOV 1956	-0.057	0.056	-0.5672	-0.5510	-0.0242
2435789.5	12.0 NOV 1956	-0.087	0.073	-0.5638	-0.5375	-0.0217
2435799.5	22.0 NOV 1956	-0.122	0.093	-0.5393	-0.5252	-0.0190
2435809.5	2.0 DEC 1956	-0.162	0.116	-0.5337	-0.5124	-0.0166
2435819.5	12.0 DEC 1956	-0.187	0.141	-0.5281	-0.5000	-0.0143
2435829.5	22.0 DEC 1956	-0.206	0.169	-0.5209	-0.4872	-0.0125
2435839.5	1.0 JAN 1957	-0.218	0.195	-0.5132	-0.4746	-0.0110
2435849.5	11.0 JAN 1957	-0.225	0.224	-0.5052	-0.4632	-0.0097
2435859.5	21.0 JAN 1957	-0.225	0.257	-0.4968	-0.4504	-0.0084
2435869.5	31.0 JAN 1957	-0.221	0.287	-0.4687	-0.4380	-0.0068
2435879.5	10.0 FEB 1957	-0.209	0.315	-0.4605	-0.4245	-0.0049
2435889.5	20.0 FEB 1957	-0.206	0.339	-0.4531	-0.4101	-0.0022
2435899.5	2.0 MAR 1957	-0.147	0.377	-0.4468	-0.3965	0.0012
2435909.5	12.0 MAR 1957	-0.100	0.404	-0.4408	-0.3819	0.0053
2435919.5	22.0 MAR 1957	-0.054	0.420	-0.4145	-0.3671	0.0101
2435929.5	1.0 APR 1957	-0.006	0.440	-0.4080	-0.3520	0.0153

TABLE IV (Cont'd)

JULIAN DATE	CALENDAR DATE	WOBBLE (") X	WOBBLE (") Y	A1-UTC SEC	A1-UT1 SEC	UT2-UT1 SEC
2435939.5	11.0 APR 1957	0.026	0.453	-0.4022	-0.3360	0.0206
2435949.5	21.0 APR 1957	0.057	0.460	-0.3959	-0.3199	0.0257
2435959.5	1.0 MAY 1957	0.105	0.460	-0.3886	-0.3029	0.0300
2435969.5	11.0 MAY 1957	0.153	0.454	-0.3609	-0.2864	0.0332
2435979.5	21.0 MAY 1957	0.193	0.440	-0.3545	-0.2710	0.0350
2435989.5	31.0 MAY 1957	0.232	0.418	-0.3490	-0.2570	0.0350
2435999.5	10.0 JUN 1957	0.270	0.393	-0.3238	-0.2439	0.0332
2436009.5	20.0 JUN 1957	0.326	0.358	-0.2983	-0.2332	0.0297
2436019.5	30.0 JUN 1957	0.356	0.313	-0.2928	-0.2249	0.0245
2436029.5	10.0 JUL 1957	0.378	0.274	-0.2672	-0.2179	0.0180
2436039.5	20.0 JUL 1957	0.386	0.241	-0.2419	-0.2111	0.0110
2436049.5	30.0 JUL 1957	0.391	0.207	-0.2368	-0.2067	0.0029
2436059.5	9.0 AUG 1957	0.394	0.173	-0.2304	-0.2009	-0.0048
2436069.5	19.0 AUG 1957	0.396	0.138	-0.2031	-0.1944	-0.0118
2436079.5	29.0 AUG 1957	0.388	0.110	-0.1939	-0.1859	-0.0179
2436089.5	8.0 SEP 1957	0.368	0.082	-0.1857	-0.1754	-0.0226
2436099.5	18.0 SEP 1957	0.336	0.054	-0.1764	-0.1636	-0.0259
2436109.5	28.0 SEP 1957	0.291	0.026	-0.1661	-0.1498	-0.0277
2436119.5	8.0 OCT 1957	0.243	-0.002	-0.1556	-0.1345	-0.0281
2436129.5	18.0 OCT 1957	0.194	-0.027	-0.1255	-0.1175	-0.0272
2436139.5	28.0 OCT 1957	0.146	-0.047	-0.1155	-0.0995	-0.0254
2436149.5	7.0 NOV 1957	0.098	-0.059	-0.0875	-0.0819	-0.0230
2436159.5	17.0 NOV 1957	0.041	-0.069	-0.0803	-0.0629	-0.0204
2436169.5	27.0 NOV 1957	-0.022	-0.075	-0.0708	-0.0439	-0.0178
2436179.5	7.0 DEC 1957	-0.092	-0.077	-0.0598	-0.0251	-0.0154
2436189.5	17.0 DEC 1957	-0.145	-0.072	-0.0297	-0.0068	-0.0134
2436199.5	27.0 DEC 1957	-0.181	-0.059	-0.0200	0.0117	-0.0117
2436209.5	6.0 JAN 1958	-0.210	-0.042	-0.0103	0.0303	-0.0103
2436219.5	16.0 JAN 1958	-0.221	-0.008	0.0186	0.0473	-0.0091
2436229.5	26.0 JAN 1958	-0.227	0.033	0.0276	0.0634	-0.0076
2436239.5	5.0 FEB 1958	-0.232	0.079	0.0362	0.0801	-0.0059
2436249.5	15.0 FEB 1958	-0.232	0.133	0.0644	0.0964	-0.0036
2436259.5	25.0 FEB 1958	-0.223	0.200	0.0926	0.1127	-0.0006
2436269.5	7.0 MAR 1958	-0.211	0.243	0.1010	0.1294	0.0032
2436279.5	17.0 MAR 1958	-0.191	0.289	0.1098	0.1468	0.0076
2436289.5	27.0 MAR 1958	-0.165	0.334	0.1182	0.1647	0.0127
2436299.5	6.0 APR 1958	-0.133	0.376	0.1272	0.1833	0.0180
2436309.5	16.0 APR 1958	-0.101	0.406	0.1561	0.2011	0.0232
2436319.5	26.0 APR 1958	-0.068	0.426	0.1649	0.2194	0.0280
2436329.5	6.0 MAY 1958	-0.032	0.443	0.1736	0.2368	0.0318
2436339.5	16.0 MAY 1958	0.006	0.458	0.1817	0.2533	0.0343
2436349.5	26.0 MAY 1958	0.046	0.468	0.1890	0.2679	0.0352
2436359.5	5.0 JUN 1958	0.086	0.473	0.1979	0.2800	0.0343
2436369.5	15.0 JUN 1958	0.123	0.470	0.2270	0.2909	0.0316
2436379.5	25.0 JUN 1958	0.156	0.462	0.2361	0.2999	0.0273
2436389.5	5.0 JUL 1958	0.187	0.449	0.2653	0.3070	0.0214

TABLE IV (Cont'd)

JULIAN DATE	CALENDAR DATE	WOBBLE (") X	WOBBLE (") Y	A1-UTC SEC	A1-UT1 SEC	UT2-UT1 SEC
2436399.5	15.0 JUL 1958	0.218	0.427	0.2744	0.3137	0.0144
2436409.5	25.0 JUL 1958	0.248	0.395	0.3034	0.3195	0.0068
2436419.5	4.0 AUG 1958	0.276	0.361	0.3122	0.3255	-0.0010
2436429.5	14.0 AUG 1958	0.303	0.321	0.3211	0.3316	-0.0084
2436439.5	24.0 AUG 1958	0.330	0.277	0.3302	0.3385	-0.0150
2436449.5	3.0 SEP 1958	0.355	0.248	0.3389	0.3467	-0.0204
2436459.5	13.0 SEP 1958	0.376	0.215	0.3477	0.3564	-0.0245
2436469.5	23.0 SEP 1958	0.392	0.162	0.3565	0.3674	-0.0270
2436479.5	3.0 OCT 1958	0.403	0.129	0.3652	0.3808	-0.0281
2436489.5	13.0 OCT 1958	0.387	0.077	0.3740	0.3957	-0.0278
2436499.5	23.0 OCT 1958	0.357	0.043	0.4024	0.4114	-0.0264
2436509.5	2.0 NOV 1958	0.319	-0.007	0.4109	0.4278	-0.0243
2436519.5	12.0 NOV 1958	0.277	-0.032	0.4192	0.4448	-0.0217
2436529.5	22.0 NOV 1958	0.229	-0.068	0.4275	0.4612	-0.0191
2436539.5	2.0 DEC 1958	0.181	-0.077	0.4556	0.4782	-0.0166
2436549.5	12.0 DEC 1958	0.128	-0.094	0.4637	0.4944	-0.0143
2436559.5	22.0 DEC 1958	0.075	-0.081	0.4724	0.5109	-0.0125
2436569.5	1.0 JAN 1959	0.022	-0.079	0.5011	0.5262	-0.0110
2436579.5	11.0 JAN 1959	-0.031	-0.070	0.5102	0.5417	-0.0097
2436589.5	21.0 JAN 1959	-0.072	-0.059	0.5193	0.5585	-0.0084
2436599.5	31.0 JAN 1959	-0.105	-0.046	0.5486	0.5742	-0.0068
2436609.5	10.0 FEB 1959	-0.126	-0.028	0.5579	0.5879	-0.0048
2436619.5	20.0 FEB 1959	-0.145	-0.005	0.5671	0.6013	-0.0022
2436629.5	2.0 MAR 1959	-0.158	0.022	0.5968	0.6149	0.0012
2436639.5	12.0 MAR 1959	-0.169	0.053	0.6060	0.6280	0.0053
2436649.5	22.0 MAR 1959	-0.175	0.087	0.6154	0.6419	0.0101
2436659.5	1.0 APR 1959	-0.174	0.123	0.6247	0.6562	0.0153
2436669.5	11.0 APR 1959	-0.168	0.161	0.6342	0.6709	0.0206
2436679.5	21.0 APR 1959	-0.160	0.197	0.6435	0.6853	0.0257
2436689.5	1.0 MAY 1959	-0.150	0.232	0.6527	0.6995	0.0300
2436699.5	11.0 MAY 1959	-0.137	0.265	0.6618	0.7128	0.0332
2436709.5	21.0 MAY 1959	-0.121	0.296	0.6708	0.7255	0.0350
2436719.5	31.0 MAY 1959	-0.102	0.324	0.6798	0.7375	0.0350
2436729.5	10.0 JUN 1959	-0.081	0.349	0.6892	0.7481	0.0332
2436739.5	20.0 JUN 1959	-0.057	0.369	0.6983	0.7582	0.0297
2436749.5	30.0 JUN 1959	-0.030	0.382	0.7073	0.7668	0.0245
2436759.5	10.0 JUL 1959	0.001	0.384	0.7162	0.7745	0.0180
2436769.5	20.0 JUL 1959	0.037	0.381	0.7250	0.7812	0.0107
2436779.5	30.0 JUL 1959	0.078	0.375	0.7335	0.7875	0.0029
2436789.5	9.0 AUG 1959	0.122	0.365	0.7622	0.7944	-0.0048
2436799.5	19.0 AUG 1959	0.174	0.347	0.7709	0.8015	-0.0118
2436809.5	29.0 AUG 1959	0.226	0.322	0.7995	0.8104	-0.0179
2436819.5	8.0 SEP 1959	0.270	0.293	0.8082	0.8213	-0.0226
2436829.5	18.0 SEP 1959	0.302	0.269	0.8168	0.8331	-0.0260
2436839.5	28.0 SEP 1959	0.319	0.249	0.8257	0.8464	-0.0277
2436849.5	8.0 OCT 1959	0.323	0.231	0.8541	0.8622	-0.0281

TABLE IV (Cont'd)

JULIAN DATE	CALENDAR DATE	WOBBLE (") X	WOBBLE (") Y	A1-UTC SEC	A1-UT1 SEC	UT2-UT1 SEC
2436859.5	18.0 OCT 1959	0.323	0.213	0.8630	0.8787	-0.0272
2436869.5	28.0 OCT 1959	0.317	0.195	0.8720	0.8963	-0.0254
2436879.5	7.0 NOV 1959	0.308	0.177	0.9011	0.9133	-0.0230
2436889.5	17.0 NOV 1959	0.294	0.157	0.9100	0.9315	-0.0204
2436899.5	27.0 NOV 1959	0.275	0.135	0.9389	0.9491	-0.0178
2436909.5	7.0 DEC 1959	0.252	0.113	0.9476	0.9654	-0.0154
2436919.5	17.0 DEC 1959	0.224	0.093	0.9766	0.9811	-0.0134
2436929.5	27.0 DEC 1959	0.193	0.075	0.9855	0.9956	-0.0117
2436939.5	6.0 JAN 1960	0.160	0.069	0.9965	1.0093	-0.0103
2436949.5	16.0 JAN 1960	0.131	0.055	1.0095	1.0222	-0.0091
2436959.5	26.0 JAN 1960	0.102	0.043	1.0223	1.0348	-0.0077
2436969.5	5.0 FEB 1960	0.073	0.033	1.0351	1.0478	-0.0060
2436979.5	15.0 FEB 1960	0.045	0.028	1.0480	1.0620	-0.0037
2436989.5	25.0 FEB 1960	0.017	0.028	1.0608	1.0768	-0.0007
2436999.5	6.0 MAR 1960	-0.011	0.034	1.0735	1.0920	0.0031
2437009.5	16.0 MAR 1960	-0.036	0.045	1.0862	1.1074	0.0075
2437019.5	26.0 MAR 1960	-0.057	0.061	1.0987	1.1238	0.0126
2437029.5	5.0 APR 1960	-0.074	0.081	1.1113	1.1396	0.0179
2437039.5	15.0 APR 1960	-0.087	0.100	1.1242	1.1559	0.0231
2437049.5	25.0 APR 1960	-0.096	0.118	1.1370	1.1724	0.0278
2437059.5	5.0 MAY 1960	-0.101	0.135	1.1497	1.1879	0.0316
2437069.5	15.0 MAY 1960	-0.101	0.151	1.1625	1.2021	0.0342
2437079.5	25.0 MAY 1960	-0.100	0.166	1.1751	1.2150	0.0352
2437089.5	4.0 JUN 1960	-0.099	0.180	1.1878	1.2260	0.0344
2437099.5	14.0 JUN 1960	-0.096	0.193	1.2004	1.2351	0.0318
2437109.5	24.0 JUN 1960	-0.090	0.205	1.2130	1.2425	0.0275
2437119.5	4.0 JUL 1960	-0.080	0.217	1.2258	1.2484	0.0217
2437129.5	14.0 JUL 1960	-0.066	0.229	1.2385	1.2530	0.0148
2437139.5	24.0 JUL 1960	-0.048	0.243	1.2514	1.2568	0.0073
2437149.5	3.0 AUG 1960	-0.028	0.258	1.2641	1.2599	-0.0005
2437159.5	13.0 AUG 1960	-0.006	0.272	1.2767	1.2639	-0.0079
2437169.5	23.0 AUG 1960	0.014	0.284	1.2892	1.2695	-0.0146
2437179.5	2.0 SEP 1960	0.034	0.294	1.3018	1.2771	-0.0201
2437189.5	12.0 SEP 1960	0.052	0.302	1.3144	1.2868	-0.0242
2437199.5	22.0 SEP 1960	0.070	0.305	1.3271	1.2980	-0.0269
2437209.5	2.0 OCT 1960	0.088	0.305	1.3397	1.3107	-0.0280
2437219.5	12.0 OCT 1960	0.104	0.303	1.3523	1.3240	-0.0278
2437229.5	22.0 OCT 1960	0.119	0.299	1.3650	1.3378	-0.0266
2437239.5	1.0 NOV 1960	0.133	0.293	1.3777	1.3522	-0.0245
2437249.5	11.0 NOV 1960	0.146	0.283	1.3904	1.3667	-0.0220
2437259.5	21.0 NOV 1960	0.148	0.269	1.4031	1.3816	-0.0194
2437269.5	1.0 DEC 1960	0.148	0.252	1.4161	1.3961	-0.0168
2437279.5	11.0 DEC 1960	0.147	0.235	1.4290	1.4108	-0.0145
2437289.5	21.0 DEC 1960	0.147	0.221	1.4419	1.4243	-0.0127
2437299.5	31.0 DEC 1960	0.147	0.209	1.4549	1.4376	-0.0111
2437309.5	10.0 JAN 1961	0.142	0.210	1.4728	1.4500	-0.0098

TABLE IV (Cont'd)

JULIAN DATE	CALENDAR DATE	WOBBLE (") X	WOBBLE (") Y	A1-UTC SEC	A1-UT1 SEC	UT2-UT1 SEC
2437319.5	20.0 JAN 1961	0.142	0.199	1.4858	1.4611	-0.0085
2437329.5	30.0 JAN 1961	0.141	0.188	1.4987	1.4699	-0.0070
2437339.5	9.0 FEB 1961	0.140	0.177	1.5116	1.4787	-0.0050
2437349.5	19.0 FEB 1961	0.138	0.164	1.5245	1.4881	-0.0025
2437359.5	1.0 MAR 1961	0.135	0.149	1.5373	1.5001	0.0008
2437369.5	11.0 MAR 1961	0.131	0.134	1.5502	1.5156	0.0049
2437379.5	21.0 MAR 1961	0.127	0.121	1.5631	1.5338	0.0097
2437389.5	31.0 MAR 1961	0.123	0.110	1.5760	1.5511	0.0148
2437399.5	10.0 APR 1961	0.118	0.101	1.5889	1.5651	0.0201
2437409.5	20.0 APR 1961	0.111	0.099	1.6017	1.5769	0.0252
2437419.5	30.0 APR 1961	0.101	0.099	1.6146	1.5880	0.0296
2437429.5	10.0 MAY 1961	0.088	0.100	1.6275	1.5990	0.0329
2437439.5	20.0 MAY 1961	0.075	0.104	1.6404	1.6118	0.0349
2437449.5	30.0 MAY 1961	0.064	0.110	1.6532	1.6234	0.0350
2437459.5	9.0 JUN 1961	0.055	0.118	1.6661	1.6341	0.0334
2437469.5	19.0 JUN 1961	0.046	0.128	1.6789	1.6430	0.0301
2437479.5	29.0 JUN 1961	0.037	0.140	1.6917	1.6506	0.0251
2437489.5	9.0 JUL 1961	0.028	0.154	1.7045	1.6569	0.0187
2437499.5	19.0 JUL 1961	0.019	0.170	1.7173	1.6625	0.0114
2437509.5	29.0 JUL 1961	0.011	0.187	1.7302	1.6677	0.0037
2437519.5	8.0 AUG 1961	0.003	0.203	1.6931	1.6730	-0.0040
2437529.5	18.0 AUG 1961	-0.003	0.207	1.7060	1.6789	-0.0111
2437539.5	28.0 AUG 1961	-0.008	0.210	1.7190	1.6857	-0.0173
2437549.5	7.0 SEP 1961	-0.012	0.213	1.7321	1.6939	-0.0222
2437559.5	17.0 SEP 1961	-0.015	0.215	1.7451	1.7033	-0.0257
2437569.5	27.0 SEP 1961	-0.018	0.217	1.7580	1.7141	-0.0276
2437579.5	7.0 OCT 1961	-0.021	0.219	1.7709	1.7262	-0.0281
2437589.5	17.0 OCT 1961	-0.024	0.220	1.7838	1.7394	-0.0273
2437599.5	27.0 OCT 1961	-0.027	0.221	1.7967	1.7535	-0.0256
2437609.5	6.0 NOV 1961	-0.029	0.222	1.8097	1.7680	-0.0233
2437619.5	16.0 NOV 1961	-0.031	0.222	1.8226	1.7828	-0.0206
2437629.5	26.0 NOV 1961	-0.033	0.223	1.8356	1.7975	-0.0181
2437639.5	6.0 DEC 1961	-0.031	0.225	1.8486	1.8117	-0.0156
2437649.5	16.0 DEC 1961	-0.025	0.230	1.8616	1.8252	-0.0136
2437659.5	26.0 DEC 1961	-0.015	0.238	1.8746	1.8377	-0.0119
2437669.5	5.0 JAN 1962	-0.038	0.237	1.8869	1.8517	-0.0104
2437679.5	15.0 JAN 1962	-0.043	0.253	1.8981	1.8644	-0.0092
2437689.5	25.0 JAN 1962	-0.046	0.264	1.9093	1.8772	-0.0078
2437699.5	4.0 FEB 1962	-0.044	0.268	1.9205	1.8896	-0.0061
2437709.5	14.0 FEB 1962	-0.042	0.277	1.9317	1.9033	-0.0038
2437719.5	24.0 FEB 1962	-0.036	0.287	1.9429	1.9174	-0.0009
2437729.5	6.0 MAR 1962	-0.018	0.296	1.9541	1.9320	0.0028
2437739.5	16.0 MAR 1962	0.008	0.303	1.9654	1.9472	0.0071
2437749.5	26.0 MAR 1962	0.030	0.303	1.9767	1.9628	0.0118
2437759.5	5.0 APR 1962	0.046	0.298	1.9879	1.9781	0.0161
2437769.5	15.0 APR 1962	0.056	0.289	1.9992	1.9943	0.0203

TABLE IV (Cont'd)

JULIAN DATE	CALENDAR DATE	WOBBLE (") X	WOBBLE (") Y	A1-UTC SEC	A1-UT1 SEC	UT2-UT1 SEC
2437779.5	25.0 APR 1962	0.065	0.281	2.0104	2.0108	0.0242
2437789.5	5.0 MAY 1962	0.072	0.275	2.0216	2.0270	0.0274
2437799.5	15.0 MAY 1962	0.076	0.269	2.0328	2.0428	0.0296
2437809.5	25.0 MAY 1962	0.077	0.260	2.0440	2.0570	0.0305
2437819.5	4.0 JUN 1962	0.078	0.247	2.0552	2.0687	0.0298
2437829.5	14.0 JUN 1962	0.080	0.233	2.0664	2.0778	0.0275
2437839.5	24.0 JUN 1962	0.087	0.218	2.0775	2.0849	0.0235
2437849.5	4.0 JUL 1962	0.093	0.202	2.0887	2.0907	0.0181
2437859.5	14.0 JUL 1962	0.097	0.185	2.0999	2.0957	0.0116
2437869.5	24.0 JUL 1962	0.097	0.167	2.1111	2.1009	0.0043
2437879.5	3.0 AUG 1962	0.089	0.151	2.1223	2.1069	-0.0031
2437889.5	13.0 AUG 1962	0.077	0.137	2.1335	2.1138	-0.0103
2437899.5	23.0 AUG 1962	0.063	0.124	2.1447	2.1220	-0.0167
2437909.5	2.0 SEP 1962	0.049	0.114	2.1559	2.1320	-0.0221
2437919.5	12.0 SEP 1962	0.034	0.108	2.1671	2.1453	-0.0260
2437929.5	22.0 SEP 1962	0.016	0.103	2.1783	2.1594	-0.0283
2437939.5	2.0 OCT 1962	-0.003	0.102	2.1894	2.1727	-0.0290
2437949.5	12.0 OCT 1962	-0.024	0.105	2.2006	2.1871	-0.0282
2437959.5	22.0 OCT 1962	-0.048	0.112	2.2119	2.2037	-0.0263
2437969.5	1.0 NOV 1962	-0.070	0.122	2.2231	2.2215	-0.0234
2437979.5	11.0 NOV 1962	-0.093	0.134	2.2343	2.2391	-0.0200
2437989.5	21.0 NOV 1962	-0.115	0.153	2.2455	2.2570	-0.0164
2437999.5	1.0 DEC 1962	-0.136	0.179	2.2567	2.2751	-0.0129
2438009.5	11.0 DEC 1962	-0.156	0.214	2.2679	2.2934	-0.0098
2438019.5	21.0 DEC 1962	-0.175	0.242	2.2791	2.3106	-0.0072
2438029.5	31.0 DEC 1962	-0.190	0.267	2.2903	2.3263	-0.0052
2438039.5	10.0 JAN 1963	-0.194	0.288	2.3015	2.3385	-0.0036
2438049.5	20.0 JAN 1963	-0.193	0.308	2.3126	2.3489	-0.0024
2438059.5	30.0 JAN 1963	-0.184	0.331	2.3238	2.3586	-0.0013
2438069.5	9.0 FEB 1963	-0.172	0.356	2.3350	2.3683	0.0
2438079.5	19.0 FEB 1963	-0.157	0.374	2.3462	2.3782	0.0017
2438089.5	1.0 MAR 1963	-0.138	0.385	2.3574	2.3888	0.0039
2438099.5	11.0 MAR 1963	-0.117	0.395	2.3687	2.4016	0.0067
2438109.5	21.0 MAR 1963	-0.092	0.407	2.3799	2.4191	0.0102
2438119.5	31.0 MAR 1963	-0.062	0.419	2.3912	2.4386	0.0141
2438129.5	10.0 APR 1963	-0.032	0.429	2.4024	2.4581	0.0182
2438139.5	20.0 APR 1963	-0.004	0.432	2.4136	2.4768	0.0223
2438149.5	30.0 APR 1963	0.026	0.425	2.4248	2.4938	0.0259
2438159.5	10.0 MAY 1963	0.060	0.413	2.4361	2.5106	0.0287
2438169.5	20.0 MAY 1963	0.094	0.404	2.4473	2.5279	0.0303
2438179.5	30.0 MAY 1963	0.127	0.390	2.4586	2.5438	0.0304
2438189.5	9.0 JUN 1963	0.156	0.368	2.4698	2.5577	0.0289
2438199.5	19.0 JUN 1963	0.180	0.339	2.4810	2.5697	0.0257
2438209.5	29.0 JUN 1963	0.199	0.306	2.4923	2.5802	0.0210
2438219.5	9.0 JUL 1963	0.212	0.273	2.5035	2.5888	0.0150
2438229.5	19.0 JUL 1963	0.220	0.236	2.5147	2.5960	0.0080

TABLE IV (Cont'd)

JULIAN DATE	CALENDAR DATE	WOBBLE (") X	WOBBLE (") Y	A1-UTC SEC	A1-UT1 SEC	UT2-UT1 SEC
2438239.5	29.0 JUL 1963	0.222	0.200	2.5260	2.6028	0.0006
2438249.5	8.0 AUG 1963	0.214	0.164	2.5372	2.6120	-0.0068
2438259.5	18.0 AUG 1963	0.195	0.134	2.5484	2.6240	-0.0136
2438269.5	28.0 AUG 1963	0.177	0.108	2.5595	2.6369	-0.0196
2438279.5	7.0 SEP 1963	0.156	0.087	2.5707	2.6511	-0.0242
2438289.5	17.0 SEP 1963	0.134	0.064	2.5819	2.6662	-0.0276
2438299.5	27.0 SEP 1963	0.108	0.042	2.5932	2.6833	-0.0288
2438309.5	7.0 OCT 1963	0.075	0.025	2.6043	2.7015	-0.0288
2438319.5	17.0 OCT 1963	0.033	0.014	2.6155	2.7214	-0.0274
2438329.5	27.0 OCT 1963	-0.008	0.015	2.6267	2.7423	-0.0249
2438339.5	6.0 NOV 1963	-0.045	0.022	2.7379	2.7639	-0.0217
2438349.5	16.0 NOV 1963	-0.078	0.032	2.7491	2.7860	-0.0182
2438359.5	26.0 NOV 1963	-0.108	0.045	2.7603	2.8077	-0.0146
2438369.5	6.0 DEC 1963	-0.138	0.059	2.7715	2.8292	-0.0113
2438379.5	16.0 DEC 1963	-0.168	0.078	2.7827	2.8500	-0.0084
2438389.5	26.0 DEC 1963	-0.202	0.106	2.7939	2.8704	-0.0061
2438399.5	5.0 JAN 1964	-0.228	0.134	2.8058	2.8906	-0.0044
2438409.5	15.0 JAN 1964	-0.247	0.162	2.8188	2.9117	-0.0030
2438419.5	25.0 JAN 1964	-0.262	0.190	2.8318	2.9324	-0.0018
2438429.5	4.0 FEB 1964	-0.272	0.220	2.8447	2.9527	-0.0007
2438439.5	14.0 FEB 1964	-0.273	0.253	2.8577	2.9724	0.0003
2438449.5	24.0 FEB 1964	-0.265	0.289	2.8707	2.9930	0.0027
2438459.5	5.0 MAR 1964	-0.248	0.325	2.8837	3.0134	0.0052
2438469.5	15.0 MAR 1964	-0.228	0.359	2.8966	3.0351	0.0088
2438479.5	25.0 MAR 1964	-0.202	0.390	2.9096	3.0562	0.0120
2438489.5	4.0 APR 1964	-0.171	0.417	3.0225	3.0774	0.0160
2438499.5	14.0 APR 1964	-0.137	0.443	3.0355	3.0988	0.0202
2438509.5	24.0 APR 1964	-0.105	0.465	3.0484	3.1210	0.0241
2438519.5	4.0 MAY 1964	-0.075	0.479	3.0613	3.1444	0.0273
2438529.5	14.0 MAY 1964	-0.046	0.482	3.0743	3.1678	0.0296
2438539.5	24.0 MAY 1964	-0.018	0.478	3.0872	3.1895	0.0305
2438549.5	3.0 JUN 1964	0.012	0.472	3.1002	3.2093	0.0299
2438559.5	13.0 JUN 1964	0.049	0.467	3.1131	3.2260	0.0276
2438569.5	23.0 JUN 1964	0.089	0.460	3.1260	3.2403	0.0237
2438579.5	3.0 JUL 1964	0.129	0.446	3.1390	3.2520	0.0184
2438589.5	13.0 JUL 1964	0.163	0.424	3.1519	3.2617	0.0119
2438599.5	23.0 JUL 1964	0.189	0.394	3.1649	3.2720	0.0048
2438609.5	2.0 AUG 1964	0.209	0.360	3.1778	3.2837	-0.0027
2438619.5	12.0 AUG 1964	0.224	0.330	3.1907	3.2965	-0.0098
2438629.5	22.0 AUG 1964	0.235	0.301	3.2036	3.3094	-0.0164
2438639.5	1.0 SEP 1964	0.240	0.270	3.3166	3.3234	-0.0217
2438649.5	11.0 SEP 1964	0.236	0.235	3.3295	3.3396	-0.0257
2438659.5	21.0 SEP 1964	0.228	0.199	3.3425	3.3590	-0.0281
2438669.5	1.0 OCT 1964	0.217	0.165	3.3565	3.3795	-0.0290
2438679.5	11.0 OCT 1964	0.202	0.136	3.3694	3.4038	-0.0283
2438689.5	21.0 OCT 1964	0.183	0.111	3.3824	3.4291	-0.0265

TABLE IV (Cont'd)

JULIAN DATE	CALENDAR DATE	WOBBLE (") X	WOBBLE (") Y	A1-UTC SEC	A1-UT1 SEC	UT2-UT1 SEC
2438699.5	31.0 OCT 1964	0.157	0.092	3.3953	3.4508	-0.0237
2438709.5	10.0 NOV 1964	0.123	0.074	3.4083	3.4719	-0.0203
2438719.5	20.0 NOV 1964	0.085	0.058	3.4212	3.4942	-0.0167
2438729.5	30.0 NOV 1964	0.048	0.049	3.4342	3.5161	-0.0132
2438739.5	10.0 DEC 1964	0.018	0.052	3.4471	3.5379	-0.0101
2438749.5	20.0 DEC 1964	-0.010	0.054	3.4601	3.5615	-0.0074
2438759.5	30.0 DEC 1964	-0.039	0.055	3.4730	3.5851	-0.0054
2438769.5	9.0 JAN 1965	-0.070	0.057	3.5859	3.6061	-0.0038
2438779.5	19.0 JAN 1965	-0.105	0.062	3.5989	3.6261	-0.0025
2438789.5	29.0 JAN 1965	-0.146	0.075	3.6118	3.6471	-0.0014
2438799.5	8.0 FEB 1965	-0.176	0.094	3.6248	3.6681	-0.0001
2438809.5	18.0 FEB 1965	-0.197	0.120	3.6377	3.6886	0.0015
2438819.5	28.0 FEB 1965	-0.209	0.150	3.6507	3.7098	0.0037
2438829.5	10.0 MAR 1965	-0.217	0.180	3.7637	3.7331	0.0064
2438839.5	20.0 MAR 1965	-0.225	0.211	3.7766	3.7588	0.0098
2438849.5	30.0 MAR 1965	-0.228	0.245	3.7896	3.7869	0.0137
2438859.5	9.0 APR 1965	-0.227	0.281	3.8026	3.8165	0.0178
2438869.5	19.0 APR 1965	-0.219	0.315	3.8155	3.8410	0.0219
2438879.5	29.0 APR 1965	-0.204	0.349	3.8285	3.8625	0.0256
2438889.5	9.0 MAY 1965	-0.186	0.383	3.8415	3.8849	0.0284
2438899.5	19.0 MAY 1965	-0.165	0.410	3.8544	3.9072	0.0301
2438909.5	29.0 MAY 1965	-0.142	0.425	3.8674	3.9287	0.0304
2438919.5	8.0 JUN 1965	-0.117	0.441	3.8803	3.9492	0.0289
2438929.5	18.0 JUN 1965	-0.088	0.454	3.8933	3.9689	0.0261
2438939.5	28.0 JUN 1965	-0.052	0.465	3.9062	3.9870	0.0215
2438949.5	8.0 JUL 1965	-0.014	0.468	4.0192	4.0041	0.0156
2438959.5	18.0 JUL 1965	0.024	0.460	4.0322	4.0209	0.0087
2438969.5	28.0 JUL 1965	0.062	0.448	4.0451	4.0367	0.0014
2438979.5	7.0 AUG 1965	0.099	0.425	4.0581	4.0516	-0.0060
2438989.5	17.0 AUG 1965	0.132	0.401	4.0710	4.0676	-0.0130
2438999.5	27.0 AUG 1965	0.158	0.377	4.0840	4.0858	-0.0190
2439009.5	6.0 SEP 1965	0.176	0.350	4.1969	4.1058	-0.0238
2439019.5	16.0 SEP 1965	0.185	0.323	4.2099	4.1280	-0.0270
2439029.5	26.0 SEP 1965	0.192	0.299	4.2229	4.1516	-0.0287
2439039.5	6.0 OCT 1965	0.197	0.275	4.2358	4.1779	-0.0288
2439049.5	16.0 OCT 1965	0.200	0.249	4.2488	4.2049	-0.0276
2439059.5	26.0 OCT 1965	0.199	0.222	4.2617	4.2326	-0.0252
2439069.5	5.0 NOV 1965	0.195	0.192	4.2747	4.2611	-0.0221
2439079.5	15.0 NOV 1965	0.186	0.163	4.2876	4.2892	-0.0186
2439089.5	25.0 NOV 1965	0.167	0.137	4.3006	4.3164	-0.0150
2439099.5	5.0 DEC 1965	0.147	0.117	4.3136	4.3408	-0.0116
2439109.5	15.0 DEC 1965	0.126	0.101	4.3265	4.3638	-0.0087
2439119.5	25.0 DEC 1965	0.102	0.087	4.3395	4.3851	-0.0063
2439129.5	4.0 JAN 1966	0.076	0.073	4.3563	4.4026	-0.0046
2439139.5	14.0 JAN 1966	0.049	0.061	4.3822	4.4270	-0.0030
2439149.5	24.0 JAN 1966	0.020	0.054	4.4081	4.4512	-0.0018

TABLE IV (Cont'd)

JULIAN DATE	CALENDAR DATE	WOBBLE (") X	WOBBLE (") Y	A1-UTC SEC	A1-UT1 SEC	UT2-UT1 SEC
2439159.5	3.0 FEB 1966	-0.012	0.052	4.4341	4.4759	-0.0007
2439169.5	13.0 FEB 1966	-0.043	0.054	4.4600	4.5006	0.0007
2439179.5	23.0 FEB 1966	-0.070	0.063	4.4859	4.5249	0.0027
2439189.5	5.0 MAR 1966	-0.092	0.074	4.5118	4.5488	0.0050
2439199.5	15.0 MAR 1966	-0.107	0.087	4.5377	4.5723	0.0080
2439209.5	25.0 MAR 1966	-0.122	0.104	4.5636	4.5975	0.0117
2439219.5	4.0 APR 1966	-0.138	0.124	4.5896	4.6234	0.0157
2439229.5	14.0 APR 1966	-0.154	0.149	4.6155	4.6499	0.0199
2439239.5	24.0 APR 1966	-0.169	0.177	4.6414	4.6775	0.0238
2439249.5	4.0 MAY 1966	-0.175	0.202	4.6673	4.7051	0.0270
2439259.5	14.0 MAY 1966	-0.173	0.223	4.6932	4.7320	0.0294
2439269.5	24.0 MAY 1966	-0.165	0.243	4.7192	4.7583	0.0305
2439279.5	3.0 JUN 1966	-0.153	0.263	4.7451	4.7829	0.0300
2439289.5	13.0 JUN 1966	-0.141	0.285	4.7710	4.8059	0.0278
2439299.5	23.0 JUN 1966	-0.126	0.304	4.7969	4.8268	0.0241
2439309.5	3.0 JUL 1966	-0.108	0.322	4.8229	4.8461	0.0188
2439319.5	13.0 JUL 1966	-0.089	0.340	4.8488	4.8645	0.0125
2439329.5	23.0 JUL 1966	-0.069	0.356	4.8747	4.8819	0.0054
2439339.5	2.0 AUG 1966	-0.048	0.361	4.9006	4.8988	-0.0021
2439349.5	12.0 AUG 1966	-0.027	0.361	4.9266	4.9171	-0.0092
2439359.5	22.0 AUG 1966	-0.007	0.361	4.9525	4.9365	-0.0159
2439369.5	1.0 SEP 1966	0.013	0.358	4.9784	4.9579	-0.0213
2439379.5	11.0 SEP 1966	0.032	0.354	5.0043	4.9810	-0.0254
2439389.5	21.0 SEP 1966	0.049	0.350	5.0302	5.0057	-0.0279
2439399.5	1.0 OCT 1966	0.065	0.346	5.0562	5.0322	-0.0290
2439409.5	11.0 OCT 1966	0.081	0.341	5.0821	5.0605	-0.0284
2439419.5	21.0 OCT 1966	0.098	0.332	5.1080	5.0894	-0.0267
2439429.5	31.0 OCT 1966	0.113	0.316	5.1339	5.1189	-0.0240
2439439.5	10.0 NOV 1966	0.124	0.294	5.1599	5.1486	-0.0206
2439449.5	20.0 NOV 1966	0.127	0.273	5.1858	5.1777	-0.0170
2439459.5	30.0 NOV 1966	0.125	0.254	5.2117	5.2055	-0.0135
2439469.5	10.0 DEC 1966	0.121	0.235	5.2369	5.2318	-0.0104
2439479.5	20.0 DEC 1966	0.112	0.220	5.2628	5.2566	-0.0076
2439489.5	30.0 DEC 1966	0.097	0.206	5.2887	5.2788	-0.0055
2439499.5	9.0 JAN 1967	0.081	0.190	5.3146	5.2993	-0.0038
2439509.5	19.0 JAN 1967	0.067	0.175	5.3406	5.3217	-0.0025
2439519.5	29.0 JAN 1967	0.056	0.169	5.3665	5.3456	-0.0014
2439529.5	8.0 FEB 1967	0.046	0.167	5.3924	5.3705	-0.0001
2439539.5	18.0 FEB 1967	0.034	0.165	5.4183	5.3961	0.0015
2439549.5	28.0 FEB 1967	0.022	0.164	5.4442	5.4219	0.0036
2439559.5	10.0 MAR 1967	0.010	0.164	5.4702	5.4477	0.0064
2439569.5	20.0 MAR 1967	0.0	0.166	5.4961	5.4736	0.0098
2439579.5	30.0 MAR 1967	-0.010	0.169	5.5220	5.5011	0.0136
2439589.5	9.0 APR 1967	-0.020	0.173	5.5478	5.5300	0.0178
2439599.5	19.0 APR 1967	-0.027	0.177	5.5738	5.5587	0.0219
2439609.5	29.0 APR 1967	-0.027	0.183	5.5998	5.5867	0.0255

TABLE IV (Cont'd)

JULIAN DATE	CALENDAR DATE	WOBBLE (") X	WOBBLE (") Y	A1-UTC SEC	A1-UT1 SEC	UT2-UT1 SEC
2439619.5	9.0 MAY 1967	-0.021	0.193	5.6258	5.6137	0.0284
2439629.5	19.0 MAY 1967	-0.022	0.200	5.6517	5.6397	0.0302
2439639.5	29.0 MAY 1967	-0.022	0.202	5.6776	5.6630	0.0304
2439649.5	8.0 JUN 1967	-0.023	0.204	5.7035	5.6839	0.0291
2439659.5	18.0 JUN 1967	-0.023	0.206	5.7295	5.7025	0.0261
2439669.5	28.0 JUN 1967	-0.021	0.210	5.7554	5.7195	0.0216
2439679.5	8.0 JUL 1967	-0.019	0.216	5.7813	5.7360	0.0157
2439689.5	18.0 JUL 1967	-0.017	0.220	5.8072	5.7529	0.0089
2439699.5	28.0 JUL 1967	-0.013	0.222	5.8331	5.7700	0.0015
2439709.5	7.0 AUG 1967	-0.009	0.216	5.8591	5.7876	-0.0059
2439719.5	17.0 AUG 1967	-0.001	0.210	5.8850	5.8056	-0.0129
2439729.5	27.0 AUG 1967	0.008	0.210	5.9109	5.8244	-0.0189
2439739.5	6.0 SEP 1967	0.004	0.207	5.9368	5.8447	-0.0237
2439749.5	16.0 SEP 1967	-0.003	0.203	5.9627	5.8657	-0.0270
2439759.5	26.0 SEP 1967	-0.007	0.204	5.9885	5.8874	-0.0287
2439769.5	6.0 OCT 1967	-0.009	0.207	6.0144	5.9106	-0.0289
2439779.5	16.0 OCT 1967	-0.011	0.209	6.0403	5.9363	-0.0277
2439789.5	26.0 OCT 1967	-0.015	0.212	6.0662	5.9652	-0.0253
2439799.5	5.0 NOV 1967	-0.021	0.219	6.0921	5.9953	-0.0222
2439809.5	15.0 NOV 1967	-0.022	0.232	6.1180	6.0252	-0.0186
2439819.5	25.0 NOV 1967	-0.016	0.246	6.1440	6.0534	-0.0150
2439829.5	5.0 DEC 1967	-0.015	0.253	6.1699	6.0781	-0.0117
2439839.5	15.0 DEC 1967	-0.014	0.256	6.1958	6.1042	-0.0088
2439849.5	25.0 DEC 1967	-0.009	0.265	6.2217	6.1295	-0.0064
2439859.5	4.0 JAN 1968	-0.004	0.270	6.2476	6.1532	-0.0046
2439869.5	14.0 JAN 1968	-0.006	0.272	6.2736	6.1792	-0.0031
2439879.5	24.0 JAN 1968	-0.006	0.274	6.2995	6.2054	-0.0020
2439889.5	3.0 FEB 1968	-0.006	0.276	6.2254	6.2317	-0.0008
2439899.5	13.0 FEB 1968	-0.004	0.273	6.2513	6.2577	0.0006
2439909.5	23.0 FEB 1968	0.0	0.269	6.2772	6.2831	0.0024
2439919.5	4.0 MAR 1968	0.004	0.263	6.3032	6.3075	0.0049
2439929.5	14.0 MAR 1968	0.007	0.261	6.3291	6.3297	0.0079
2439939.5	24.0 MAR 1968	0.009	0.258	6.3550	6.3522	0.0116
2439949.5	3.0 APR 1968	0.011	0.254	6.3809	6.3784	0.0156
2439959.5	13.0 APR 1968	0.014	0.254	6.4068	6.4072	0.0197
2439969.5	23.0 APR 1968	0.018	0.256	6.4328	6.4358	0.0237
2439979.5	3.0 MAY 1968	0.022	0.258	6.4587	6.4656	0.0270
2439989.5	13.0 MAY 1968	0.028	0.250	6.4846	6.4936	0.0294
2439999.5	23.0 MAY 1968	0.037	0.236	6.5105	6.5197	0.0305
2440009.5	2.0 JUN 1968	0.047	0.220	6.5364	6.5436	0.0300
2440019.5	12.0 JUN 1968	0.055	0.208	6.5624	6.5650	0.0279
2440029.5	22.0 JUN 1968	0.062	0.198	6.5883	6.5838	0.0242
2440039.5	2.0 JUL 1968	0.068	0.188	6.6142	6.6016	0.0189
2440049.5	12.0 JUL 1968	0.074	0.180	6.6401	6.6202	0.0126
2440059.5	22.0 JUL 1968	0.079	0.174	6.6660	6.6403	0.0054
2440069.5	1.0 AUG 1968	0.082	0.168	6.6920	6.6612	-0.0021

TABLE IV (Cont'd)

JULIAN DATE	CALENDAR DATE	WOBBLE (") X	WOBBLE (") Y	A1-UTC SEC	A1-UT1 SEC	UT2-UT1 SEC
2440079.5	11.0 AUG 1968	0.080	0.165	6.7179	6.6834	-0.0093
2440089.5	21.0 AUG 1968	0.071	0.162	6.7438	6.7071	-0.0159
2440099.5	31.0 AUG 1968	0.059	0.160	6.7697	6.7318	-0.0214
2440109.5	10.0 SEP 1968	0.046	0.158	6.7956	6.7570	-0.0255
2440119.5	20.0 SEP 1968	0.037	0.151	6.8216	6.7818	-0.0280
2440129.5	30.0 SEP 1968	0.031	0.145	6.8475	6.8067	-0.0290
2440139.5	10.0 OCT 1968	0.024	0.141	6.8734	6.8322	-0.0285
2440149.5	20.0 OCT 1968	0.008	0.133	6.8993	6.8586	-0.0267
2440159.5	30.0 OCT 1968	-0.014	0.130	6.9252	6.8859	-0.0239
2440169.5	9.0 NOV 1968	-0.037	0.130	6.9512	6.9130	-0.0205
2440179.5	19.0 NOV 1968	-0.068	0.139	6.9771	6.9400	-0.0169
2440189.5	29.0 NOV 1968	-0.101	0.156	7.0030	6.9668	-0.0134
2440199.5	9.0 DEC 1968	-0.134	0.186	7.0289	6.9943	-0.0102
2440209.5	19.0 DEC 1968	-0.146	0.215	7.0548	7.0214	-0.0076
2440219.5	29.0 DEC 1968	-0.149	0.238	7.0808	7.0480	-0.0055
2440229.5	8.0 JAN 1969	-0.149	0.261	7.10669	7.0739	-0.0038
2440239.5	18.0 JAN 1969	-0.137	0.282	7.13261	7.0992	-0.0026
2440249.5	28.0 JAN 1969	-0.119	0.297	7.15853	7.1250	-0.0014
2440259.5	7.0 FEB 1969	-0.098	0.307	7.18445	7.1508	-0.0002
2440269.5	17.0 FEB 1969	-0.078	0.316	7.21037	7.1773	0.0014
2440279.5	27.0 FEB 1969	-0.062	0.328	7.23629	7.2043	0.0035
2440289.5	9.0 MAR 1969	-0.045	0.337	7.26221	7.2324	0.0062
2440299.5	19.0 MAR 1969	-0.034	0.350	7.28813	7.2618	0.0096
2440309.5	29.0 MAR 1969	-0.025	0.360	7.31405	7.2923	0.0134
2440319.5	8.0 APR 1969	-0.014	0.368	7.33997	7.3241	0.0176
2440329.5	18.0 APR 1969	-0.001	0.372	7.36589	7.3571	0.0217
2440339.5	28.0 APR 1969	0.014	0.373	7.39181	7.3888	0.0254
2440349.5	8.0 MAY 1969	0.029	0.371	7.41773	7.4185	0.0283
2440359.5	18.0 MAY 1969	0.046	0.365	7.44365	7.4467	0.0301
2440369.5	28.0 MAY 1969	0.062	0.357	7.46957	7.4733	0.0305
2440379.5	7.0 JUN 1969	0.080	0.346	7.49549	7.4980	0.0292
2440389.5	17.0 JUN 1969	0.099	0.332	7.52141	7.5211	0.0263
2440399.5	27.0 JUN 1969	0.117	0.317	7.54733	7.5426	0.0218
2440409.5	7.0 JUL 1969	0.134	0.300	7.57325	7.5632	0.0160
2440419.5	17.0 JUL 1969	0.147	0.273	7.59917	7.5831	0.0092
2440429.5	27.0 JUL 1969	0.152	0.241	7.62509	7.6029	0.0019
2440439.5	6.0 AUG 1969	0.151	0.205	7.65101	7.6229	-0.0056
2440449.5	16.0 AUG 1969	0.137	0.173	7.67693	7.6436	-0.0125
2440459.5	26.0 AUG 1969	0.120	0.147	7.70285	7.6653	-0.0187
2440469.5	5.0 SEP 1969	0.098	0.125	7.72877	7.6891	-0.0235
2440479.5	15.0 SEP 1969	0.079	0.115	7.75469	7.7156	-0.0269
2440489.5	25.0 SEP 1969	0.065	0.111	7.78061	7.7479	-0.0287
2440499.5	5.0 OCT 1969	0.050	0.108	7.80653	7.7816	-0.0289
2440509.5	15.0 OCT 1969	0.039	0.106	7.83245	7.8112	-0.0277
2440519.5	25.0 OCT 1969	0.029	0.104	7.85837	7.8402	-0.0254
2440529.5	4.0 NOV 1969	0.021	0.102	7.88429	7.8690	-0.0223

TABLE IV (Cont'd)

JULIAN DATE	CALENDAR DATE	WOBBLE (") X	WOBBLE (") Y	A1-UTC SEC	A1-UT1 SEC	UT2-UT1 SEC
2440539.5	14.0 NOV 1969	0.004	0.101	7.91021	7.8973	-0.0188
2440549.5	24.0 NOV 1969	-0.020	0.106	7.93613	7.9254	-0.0152
2440559.5	4.0 DEC 1969	-0.044	0.114	7.96205	7.9561	-0.0118
2440569.5	14.0 DEC 1969	-0.074	0.125	7.98797	7.9858	-0.0089
2440579.5	24.0 DEC 1969	-0.103	0.135	8.01389	8.0140	-0.0065
2440589.5	3.0 JAN 1970	-0.129	0.146	8.03981	8.0421	-0.0046
2440599.5	13.0 JAN 1970	-0.151	0.175	8.06573	8.0703	-0.0032
2440609.5	23.0 JAN 1970	-0.166	0.210	8.09165	8.0992	-0.0020
2440619.5	2.0 FEB 1970	-0.174	0.251	8.11757	8.1282	-0.0009
2440629.5	12.0 FEB 1970	-0.173	0.290	8.14349	8.1572	0.0005
2440639.5	22.0 FEB 1970	-0.161	0.323	8.16941	8.1864	0.0023
2440649.5	4.0 MAR 1970	-0.139	0.350	8.19533	8.2159	0.0047
2440659.5	14.0 MAR 1970	-0.119	0.371	8.22125	8.2458	0.0077
2440669.5	24.0 MAR 1970	-0.109	0.388	8.24717	8.2764	0.0114
2440679.5	3.0 APR 1970	-0.106	0.399	8.27309	8.3073	0.0154
2440689.5	13.0 APR 1970	-0.101	0.410	8.29901	8.3389	0.0195
2440699.5	23.0 APR 1970	-0.089	0.421	8.32493	8.3712	0.0235
2440709.5	3.0 MAY 1970	-0.071	0.434	8.35085	8.4028	0.0269
2440719.5	13.0 MAY 1970	-0.051	0.444	8.37677	8.4331	0.0293
2440729.5	23.0 MAY 1970	-0.021	0.448	8.40269	8.4619	0.0305
2440739.5	2.0 JUN 1970	0.017	0.448	8.42861	8.4886	0.0301
2440749.5	12.0 JUN 1970	0.055	0.442	8.45453	8.5132	0.0281
2440759.5	22.0 JUN 1970	0.088	0.426	8.48045	8.5358	0.0244
2440769.5	2.0 JUL 1970	0.119	0.402	8.50637	8.5570	0.0192
2440779.5	12.0 JUL 1970	0.145	0.373	8.53229	8.5767	0.0129
2440789.5	22.0 JUL 1970	0.168	0.342	8.55821	8.5951	0.0058
2440799.5	1.0 AUG 1970	0.186	0.309	8.58413	8.6136	-0.0017
2440809.5	11.0 AUG 1970	0.199	0.276	8.61005	8.6326	-0.0090
2440819.5	21.0 AUG 1970	0.207	0.244	8.63597	8.6528	-0.0156
2440829.5	31.0 AUG 1970	0.209	0.213	8.66189	8.6737	-0.0211
2440839.5	10.0 SEP 1970	0.205	0.183	8.68781	8.6958	-0.0253
2440849.5	20.0 SEP 1970	0.199	0.155	8.71373	8.7201	-0.0279
2440859.5	30.0 SEP 1970	0.191	0.128	8.73965	8.7464	-0.0290
2440869.5	10.0 OCT 1970	0.183	0.101	8.76557	8.7745	-0.0285
2440879.5	20.0 OCT 1970	0.160	0.078	8.79149	8.8040	-0.0268
2440889.5	30.0 OCT 1970	0.120	0.063	8.81741	8.8349	-0.0240
2440899.5	9.0 NOV 1970	0.078	0.053	8.84333	8.8661	-0.0207
2440909.5	19.0 NOV 1970	0.048	0.038	8.86925	8.8968	-0.0171
2440919.5	29.0 NOV 1970	0.024	0.023	8.89517	8.9267	-0.0136
2440929.5	9.0 DEC 1970	0.0	0.013	8.92109	8.9560	-0.0104
2440939.5	19.0 DEC 1970	-0.029	0.013	8.94701	8.9834	-0.0077
2440949.5	29.0 DEC 1970	-0.057	0.022	8.97293	9.0101	-0.0055
2440959.5	8.0 JAN 1971	-0.085	0.035	8.99885	9.0374	-0.0039
2440969.5	18.0 JAN 1971	-0.111	0.057	9.02477	9.0639	-0.0026
2440979.5	28.0 JAN 1971	-0.133	0.085	9.05069	9.0895	-0.0015
2440989.5	7.0 FEB 1971	-0.152	0.117	9.07661	9.1147	-0.0003

TABLE IV (Cont'd)

JULIAN DATE	CALENDAR DATE	WOBBLE (") X	WOBBLE (") Y	A1-UTC SEC	A1-UT1 SEC	UT2-UT1 SEC
2440999.5	17.0 FEB 1971	-0.174	0.148	9.10253	9.1405	0.0013
2441009.5	27.0 FEB 1971	-0.196	0.178	9.12845	9.1669	0.0034
2441019.5	9.0 MAR 1971	-0.209	0.211	9.15437	9.1948	0.0061
2441029.5	19.0 MAR 1971	-0.216	0.253	9.18029	9.2256	0.0094
2441039.5	29.0 MAR 1971	-0.212	0.301	9.20621	9.2578	0.0132
2441049.5	8.0 APR 1971	-0.200	0.340	9.23213	9.2904	0.0174
2441059.5	18.0 APR 1971	-0.192	0.370	9.25805	9.3229	0.0215
2441069.5	28.0 APR 1971	-0.183	0.397	9.28397	9.3551	0.0252
2441079.5	8.0 MAY 1971	-0.170	0.424	9.30989	9.3867	0.0282
2441089.5	18.0 MAY 1971	-0.150	0.452	9.33581	9.4170	0.0300
2441099.5	28.0 MAY 1971	-0.129	0.480	9.36173	9.4462	0.0305
2441109.5	7.0 JUN 1971	-0.104	0.505	9.38765	9.4737	0.0293
2441119.5	17.0 JUN 1971	-0.061	0.519	9.41357	9.4997	0.0265
2441129.5	27.0 JUN 1971	0.002	0.524	9.43949	9.5243	0.0221
2441139.5	7.0 JUL 1971	0.060	0.520	9.46541	9.5478	0.0163
2441149.5	17.0 JUL 1971	0.103	0.500	9.49133	9.5709	0.0096
2441159.5	27.0 JUL 1971	0.140	0.476	9.51725	9.5939	0.0022
2441169.5	6.0 AUG 1971	0.170	0.450	9.54317	9.6174	-0.0052
2441179.5	16.0 AUG 1971	0.198	0.421	9.56909	9.6408	-0.0122
2441189.5	26.0 AUG 1971	0.224	0.387	9.59501	9.6651	-0.0184
2441199.5	5.0 SEP 1971	0.245	0.351	9.62093	9.6907	-0.0233
2441209.5	15.0 SEP 1971	0.258	0.317	9.64685	9.7167	-0.0268
2441219.5	25.0 SEP 1971	0.263	0.283	9.67277	9.7449	-0.0286
2441229.5	5.0 OCT 1971	0.264	0.249	9.69869	9.7762	-0.0289
2441239.5	15.0 OCT 1971	0.252	0.211	9.72461	9.8118	-0.0278
2441249.5	25.0 OCT 1971	0.229	0.175	9.75053	9.8495	-0.0256
2441259.5	4.0 NOV 1971	0.203	0.139	9.77645	9.8856	-0.0225
2441269.5	14.0 NOV 1971	0.179	0.118	9.80237	9.9223	-0.0190
2441279.5	24.0 NOV 1971	0.157	0.103	9.82829	9.9581	-0.0154
2441289.5	4.0 DEC 1971	0.135	0.092	9.85421	9.9917	-0.0120
2441299.5	14.0 DEC 1971	0.109	0.078	9.88013	10.0229	-0.0090
2441309.5	24.0 DEC 1971	0.083	0.062	9.90605	10.0518	-0.0066

The above table is revised and extended as new punched cards are received from the U. S. Naval Observatory Time Service. After 1.0 Jan 1972 we have

A1-UTC(USNO) = 10.0343817 sec

with one second quantum jumps (leap seconds) in A1-UTC every six months or a year to keep UTC within 0.7 sec of UT2. We also have

UTC(USNO)-UTC(BIH) = 0.00001 sec

IAT -UTC(BIH) =10.00000 sec

where IAT stands for International Atomic Time. From the above we have

IAT-A1 = -0.03439 sec

We hope to keep PEP on the A1 atomic time system rather than changing to the new International Atomic Time. If we did change to IAT, we should replace (23) by

CT-IAT = 32.18439 sec

to be consistent with previous work.

III-D. Coordinate Systems

If we went back to first principles and numerically integrated and fit to data the motion of the earth (or earth-moon barycenter) relative to the sun and the motion of the earth about its center of mass, we would specify our fundamental coordinate directions by setting two of the initial conditions of the motions to defined values. However, we shall utilize the presently accepted expressions for the motion of the earth about its center of mass. We shall integrate the motion of earth satellites in the coordinate system (x^1, x^2, x^3) referred to the mean equinox and equator of 1950.0. The x^3 axis is perpendicular to the mean equator of 1950.0 and points to the north, the x^1 axis is the intersection of the mean equator and ecliptic of 1950.0 and points towards the constellation Aries, and the x^2 axis completes the right hand system. We leave the word "mean" undefined and just state that the operational definition of the coordinate system referred to the mean equinox and equator of 1950.0 is contained in Section IV, where we give the presently accepted expressions for the transformation of coordinates fixed in the earth to these coordinates.

This transformation of coordinates involves the wobble, rotation, nutation and precession of the earth. The formulas for the nutation and precession and the constants appearing in them were derived by Simon Newcomb in the late nineteenth century with revisions in the formulas given by Woolard in 1953 (see Ref. 14). Assuming these expressions to be correct, the wobble and rotation of the earth are derived empirically as follows.

Star observations are made with photographic zenith tubes at a number of sites around the earth as a function of (essentially) atomic time Al. Using these observations the (x,y) coordinates of the pole of rotation relative to the pole of figure of the earth are determined, where x is measured along the meridian towards Greenwich and y along the meridian 90° to the west of Greenwich. The specific results obtained depend on the accuracy of the star catalogue employed. The axis of rotation is said to wander relative to a reference system fixed in the earth, whereas the earth is said to wobble relative to the axis of rotation. At the surface of the earth the motion of

the pole of rotation relative to the pole of figure of the earth lies in a circle of radius about 100 feet so that the angular separation of the two poles is less than 1 second of arc.

The International Polar Motion Service (IPMS, formerly the International Latitude Service ILS) and the Bureau International de l'Heure (BIH) publish the (x,y) coordinates of the pole in seconds of arc resulting from their observations. They give approximately the same results. The BIH results would tend to be more accurate because they make use of many more observing sites than does the IPMS. The BIH results go back to 1956, whereas the IPMS results extend back to 1900.

Local sidereal time can be determined at one site as a function of A1 atomic time from photographic zenith tube star observations given the wobble of the earth derived from observations at many sites. Of course these results depend on the star catalogue employed. Simon Newcomb's formula relating Greenwich sidereal time and UT1 universal time (Newcomb's mean solar time) can then be applied to yield A1 − UT1 as a function of A1 time. The BIH publishes values of A1 − UT1 together with their wobble results derived from photographic zenith tube observations made by the national time services in many countries. The U.S. Naval Observatory uses the BIH wobble and photographic zenith tube observations made in Washington, D. C. and Richmond, Florida, to derive their values of A1 − UT1. The BIH wobble and U.S. Naval Observatory A1 − UT1 are given in Table IV.

The epoch of a modern observation is given in UTC time. To calculate the theoretical value of the observation PEP determines A1 − UTC, A1 − UT1 and the (x,y) wobble coordinates of the pole from the data in Table IV. This data is continually updated with punched cards sent from the U.S. Naval Observatory. Knowing the A1 time of observation, coordinate time CT can be derived from (23) or (41) for use in calculating satellite coordinates from the results of the numerical integration in the coordinate system referred to the mean equinox and equator 1950.0 . Knowing the UT1 time of observation and the (x,y) wobble coordinates, the transformation of observing site coordinates fixed in the earth to the coordinate system referred to the mean equinox and equator of 1950.0 can be performed as explained in Section IV. Having obtained

vectors from the center of the earth to the observing sites and observed satellite in the coordinate system referred to the mean equinox and equator of 1950.0, the theoretical value of the observation can be calcualted from the formulas in Section VII.

UT2 time differs from UT1 time by an empirical formula arising from the observed seasonal variation in the rate of rotation of the earth. Before 1.0 January 1962 the formula used is (see Ref. 6, p. 445)

$$\begin{aligned} UT2 - UT1 = {} & 0\overset{s}{.}022 \sin 2\pi t - 0\overset{s}{.}017 \cos 2\pi t \\ & - 0\overset{s}{.}007 \sin 4\pi t + 0\overset{s}{.}006 \cos 4\pi t \end{aligned} \tag{48}$$

where t is the fraction of year and equal to 0 on January 1. After 1.0 January 1962 the following formula is used

$$\begin{aligned} UT2 - UT1 = {} & 0\overset{s}{.}022 \sin 2\pi t - 0\overset{s}{.}012 \cos 2\pi t \\ & - 0\overset{s}{.}006 \sin 4\pi t + 0\overset{s}{.}007 \cos 4\pi t \end{aligned} \tag{49}$$

according to Ref. 15, p. 164.

UT0 time is UT1 time without the wobble correction, and therefore is site dependent.

III-E. Past History of CT − UT1

For the observables that existed before 1956, the epoch specified for an observation was essentially universal time UT1 (or UT0 if wobble was not removed in the case of a meridian circle observation; see Section VII-D-4). How are we to relate UT1 and coordinate time CT? We write

$$CT - UT1 = (CT - UT2) + (UT2 - UT1) \tag{50}$$

where the seasonal terms in (UT2 − UT1) are given by a trigonometric expansion and where CT − UT2 is a piecewise linear function.

We presume that we have coordinate time points $t_o, t_1, t_2, \ldots, t_n$ stretching backward in time with the value of CT − UT2 at time t_i being y_i. Then between tabular points we assume that

$$CT - UT2 = \frac{y_i - y_{i-1}}{t_i - t_{i-1}} (CT - t_{i-1}) + y_{i-1}$$

where i $(1 \leq i \leq n)$ is such that

$$t_{i-1} > CT > t_i \tag{51}$$

Tabular point t_o is chosen to be in 1956 and y_o fixed at the value of A1 + $32^s.15$ − UT2 at that instant. The remaining time points $t_1, t_2, \ldots, t_n$ are chosen at convenient intervals to provide a meaningful modeling of CT − UT2 given the observations of the sun, moon, and planets back to 1750 which are to be used to determine $y_1, y_2, \ldots, y_n$. We choose an interval of 4 years. The provisional values y_i of CT − UT2 at these tabular points given in Table V are taken from the values of ET − UT2 in Ref. 6, pp. 90-91 and Ref. 7, p. vii. We choose a linear relationship before 1784.5 in case it is decided in the future to use a less fine spacing of tabular points in the 18th century.

We assume that

$$\begin{aligned} UT2 - UT1 = {} & (a_o + a_1 T) \sin 2\pi t + (b_o + b_1 T) \cos 2\pi t \\ & + (c_o + c_1 T) \sin 4\pi t + (d_o + d_1 T) \cos 4\pi t \end{aligned} \tag{52}$$

where T is the time in centuries from the 1956 start of the CT − UT2 table and where t is the fraction of year equal to 0 on January 1. We choose provisional values of a_o, b_o, c_o, d_o as in (48) and take the provisional values of a_1, b_1, c_1, d_1 to be zero. We would attempt to estimate these coefficients if the data allow.

TABLE V

PROVISIONAL VALUES OF CT-UT2 (1956 - 1750)

	Julian Day Number	Calendar Date	CT-UT2 (sec)
0.	2435490	1956 Jan 17.0	31.3669
1.	2434195	1952.5	30.2900
2.	2432734	1948.5	28.1500
3.	2431273	1944.5	26.0800
4.	2429812	1940.5	24.3000
5.	2428351	1936.5	23.5800
6.	2426890	1932.5	23.5000
7.	2425429	1928.5	22.9200
8.	2423968	1924.5	22.2900
9.	2422507	1920.5	20.4800
10.	2421046	1916.5	17.3700
11.	2419585	1912.5	12.9500
12.	2418124	1908.5	7.5100
13.	2416663	1904.5	1.8000
14.	2415202	1900.5	-3.7900
15.	2413741	1896.5	-7.1900
16.	2412280	1892.5	-8.0400
17.	2410819	1888.5	-7.5800
18.	2409358	1884.5	-8.0700
19.	2407897	1880.5	-8.1400
20.	2406436	1876.5	-7.6700
21.	2404975	1872.5	-4.4800
22.	2403514	1868.5	0.2000
23.	2402053	1864.5	2.2600
24.	2400592	1860.5	3.3200
25.	2399131	1856.5	3.4600
26.	2397670	1852.5	2.9000
27.	2396209	1848.5	2.1200
28.	2394748	1844.5	1.1300
29.	2393287	1840.5	-0.0600
30.	2391826	1836.5	-0.0400
31.	2390365	1832.5	1.4900
32.	2388904	1828.5	2.3700
33.	2387443	1824.5	3.4900
34.	2385982	1820.5	5.3200
35.	2384521	1816.5	5.0400
36.	2383060	1812.5	4.7600
37.	2381599	1808.5	5.0000
38.	2380138	1804.5	5.4000
39.	2378677	1800.5	5.8000
40.	2377216	1796.5	6.4250
41.	2375755	1792.5	7.0500
42.	2374294	1788.5	7.6750
43.	2372833	1784.5	8.3000
44.	2371272	1780.5	7.3300
45.	2369911	1776.5	6.3600
46.	2368450	1772.5	5.3900
47.	2366989	1768.5	4.4200
48.	2365528	1764.5	3.4500
49.	2364067	1760.5	2.4800
50.	2362606	1756.5	1.5100
51.	2360200	1749 Nov 27.0	-0.0874

The partial derivative of an observation with respect to one of the above parameters α involves

$$\frac{\partial}{\partial\alpha}(CT - UT1) = \frac{\partial}{\partial\alpha}(CT - UT2) + \frac{\partial}{\partial\alpha}(UT2 - UT1) \tag{53}$$

If α is one of the coefficients in $UT2 - UT1$, the expression for the partial derivative is obvious. If $\alpha = y_i$ $(i = 1, \ldots, n)$ we have

$$\frac{\partial}{\partial y_i}(CT - UT_1) = \begin{cases} 0 & CT > t_{i-1} \\ \dfrac{CT - t_{i-1}}{t_i - t_{i-1}} & t_{i-1} > CT > t_i \\ 1 - \dfrac{CT - t_i}{t_{i+1} - t_i} & t_i > CT > t_{i+1} \\ 0 & t_{i+1} > CT \end{cases} \tag{54}$$

In the estimation of the $CT - UT2$ table we are tied at one end by our definition of units. A value y_i has a memory on either side of its tabular point t_i that dies out the further one gets from the tabular point t_i. These attributes are what one might imagine that the physical situation possesses, since the variation in $CT - UT1$ is due to changes in the moments of inertia of the earth and tidal friction.

IV. MOTION OF THE EARTH ABOUT ITS CENTER OF MASS

We present the presently accepted expressions for the transformation of coordinates fixed in the earth to those referred to the mean equinox and equator of 1950.0.

Let (u^1, u^2, u^3) be a coordinate system with origin at the center of mass of the earth, with u^3 axis pointing to the north along the mean rotation axis of the earth in 1900 - 1905, with u^1 axis being normal to the u^3 axis and lying in the plane through Greenwich and the mean rotation axis of 1968.0 on the same side of u^3 as Greenwich, and with u^2 axis completing the right hand system. By "Greenwich" we mean the site of the old Airy transit circle at the Royal Greenwich Observatory. The u^3 axis is called the axis of figure of the earth. It coincides closely with the maximum moment of inertia axis of the earth. Our choice of u^1 axis is dictated by our use of the x,y wobble coordinates and value of A1-UT1 given on the punched cards disbursed by the U.S. Naval Observatory (see Table IV)*.

Let (x^1, x^2, x^3) be a coordinate system with origin at the center of mass of the earth referred to the mean equinox and equator of 1950.0. The x^3 axis is perpendicular to the mean equator of 1950.0, the x^1 axis lies along the intersection of the mean equator and mean ecliptic of 1950.0 and points in the general direction of the constellation Aries, and the x^2 axis completes the right hand system.

The transformation between these reference systems is given by

$$\left.\begin{aligned} u^k &= \sum_{\ell=1}^{3} A_{k\ell}\, x^\ell \\ x^k &= \sum_{\ell=1}^{3} A_{\ell k}\, u^\ell \end{aligned}\right\} \quad k = 1,2,3 \tag{55}$$

---

* Private communication from G. M. R. Winkler, Director, U.S. Naval Observatory Time Service Division (12 March 1971).

where the orthogonal matrix A can be written as

$$\begin{bmatrix} A_{11} & A_{12} & A_{13} \\ A_{21} & A_{22} & A_{23} \\ A_{31} & A_{32} & A_{33} \end{bmatrix} = WSNP \tag{56}$$

The wobble W, rotation S, nutation N and precession P matrices are discussed below. Matrix multiplication follows the usual row X column rule, so that, for instance,

$$(NP)_{ij} = \sum_{k=1}^{3} N_{ik}P_{kj} \tag{57}$$

IV-A. Wobble

Let (u^1, u^2, u^3) be the coordinate system fixed in the earth with origin at the center of mass of the earth as described above. Let (v^1, v^2, v^3) be a coordinate system with origin at the center of mass of the earth, with v^3 axis pointing to the north along the axis of rotation of the earth, with v^1 axis being normal to the v^3 axis and lying in the plane through the v^3 axis and the u^1 axis pointing in the same general direction as u^1, and with v^2 axis completing the right hand system.

Following Ref. 16, pp. 184-187, let γ be the angle from the u^3 axis to the v^3 axis and let Γ be the angle eastward from the u^1 axis to the projection of the v^3 axis on the (u^1, u^2) plane. We define

$$\begin{aligned} x &= +\gamma \cos \Gamma \\ y &= -\gamma \sin \Gamma \end{aligned} \tag{58}$$

Let $\vec{\varepsilon}_1, \vec{\varepsilon}_2, \vec{\varepsilon}_3$ be unit vectors in the u^1, u^2, u^3 coordinate directions and let $\vec{\varepsilon}_1{}^*, \vec{\varepsilon}_2{}^*, \vec{\varepsilon}_3{}^*$ be unit vectors in the v^1, v^2, v^3 coordinate

directions. We have

$$\vec{\varepsilon}_3 = \sin\gamma\cos\Gamma\,\vec{\varepsilon}_1 + \sin\gamma\sin\Gamma\,\vec{\varepsilon}_2 + \cos\gamma\,\vec{\varepsilon}_3$$

$$\approx x\,\vec{\varepsilon}_1 - y\,\vec{\varepsilon}_2 + \vec{\varepsilon}_3 \tag{59}$$

if γ is a small angle in radians. Similarly, we have

$$\vec{\varepsilon}_1 = \frac{\vec{\varepsilon}_1 - (\vec{\varepsilon}_1 \cdot \vec{\varepsilon}_3{}^*)\vec{\varepsilon}_3{}^*}{|\vec{\varepsilon}_1 - (\vec{\varepsilon}_1 \cdot \vec{\varepsilon}_3{}^*)\vec{\varepsilon}_3{}^*|} \approx \vec{\varepsilon}_1 - x\,\vec{\varepsilon}_3$$

$$\vec{\varepsilon}_2{}^* = \vec{\varepsilon}_3{}^* \times \vec{\varepsilon}_1{}^* \approx \vec{\varepsilon}_2 + y\,\vec{\varepsilon}_3 \tag{60}$$

Thus the transformation between the (u^1, u^2, u^3) and (v^1, v^2, v^3) rectangular coordinates is given by

$$\left.\begin{aligned} u^k &= \sum_{\ell=1}^{3} W_{k\ell}\, v^\ell \\ v^k &= \sum_{\ell=1}^{3} W_{\ell k}\, u^\ell \end{aligned}\right\} \quad k = 1,2,3 \tag{61}$$

where the orthogonal wobble matrix W can be written as (see Ref. 15, pp. 80-86)

$$\begin{bmatrix} W_{11} & W_{12} & W_{13} \\ W_{21} & W_{22} & W_{23} \\ W_{31} & W_{32} & W_{33} \end{bmatrix} = \begin{bmatrix} 1 & 0 & x \\ 0 & 1 & -y \\ -x & y & 1 \end{bmatrix} \tag{62}$$

The values of x,y are given in Table IV in units of seconds or arc, which must be converted to radians for use in (62).

IV-B. Rotation

Let (v^1, v^2, v^3) be the coordinate system described above with origin at the center of mass of the earth and with v^3 axis along the axis of rotation of the earth. Let (w^1, w^2, w^3) be the coordinate system with origin at the center mass of the earth referred to the true equinox and equator of date. The w^3 axis points along the axis of rotation of the earth, the w^1 axis points along the intersection of the true equator and true ecliptic of date and the w^2 axis completes the right hand system. We have

$$\left.\begin{aligned} v^k &= \sum_{\ell=1}^{3} S_{k\ell}\, w^\ell \\ w^k &= \sum_{\ell=1}^{3} S_{\ell k}\, v^\ell \end{aligned}\right\} \quad k = 1,2,3 \tag{63}$$

where the orthogonal matrix S is given in terms of the Greenwich true sidereal time Θ by

$$\begin{bmatrix} S_{11} & S_{12} & S_{13} \\ S_{21} & S_{22} & S_{23} \\ S_{31} & S_{32} & S_{33} \end{bmatrix} = \begin{bmatrix} \cos\Theta & \sin\Theta & 0 \\ -\sin\Theta & \cos\Theta & 0 \\ 0 & 0 & 1 \end{bmatrix} \tag{64}$$

Given the UTC time of an observation, we determine UT1 universal time from the values of A1-UTC and A1-UT1 in Table IV. By Ref. 6, p. 72,

$$\Theta = \Theta_o + \Delta\psi \cos\varepsilon \tag{65}$$

where Θ_o is the Greenwich mean sidereal time and $\Delta\psi$ is the nutation in longitude and ε the obliquity of the ecliptic (see below). The second order terms in the nutation ignored in (64) are less than 10^{-4} seconds of time, which is just below the accuracy in the determination of A1-UT1. By Ref. 7, p. 525, the Greenwich mean sidereal time $\overline{\Theta}_o$ at 0^h UT1 time on the day of interest is

$$\overline{\Theta}_o = 6^h 38^m 45.^s 836 + 8{,}640{,}184.^s 542 \; T$$

$$+ \; 0.^s 0929 \; T^2 \tag{66}$$

where T denotes the number of Julian centuries of 36525 days which, at midnight beginning of day, have elapsed since mean noon on 1900 January 0 at the Greenwich meridian (Julian Date 2415020.0). The Greenwich mean sidereal time Θ_o at the given instant of UT1 universal time on that day is

$$\Theta_o = \overline{\Theta}_o + \frac{d\Theta_o}{dt} \times \text{UT1} \tag{67}$$

where by Ref. 6, pp. 75-76

$$\frac{d\Theta_o}{dt} = (1.002737909265 + 0.589 \times 10^{-10} T)$$

sidereal time seconds per universal time second (68)

The values of x,y and A1-UT1 on the U.S. Naval Observatory Time Service punched cards (see Table IV) are derived from observations using the above expressions in which these quantities appear as variables and assuming the validity of the below expressions for the nutation and precession.

IV-C. Nutation

Let (w^1, w^2, w^3) be the coordinate system with origin at the center of mass of the earth referred to the true equinox and equator of date and let (y^1, y^2, y^3) be the coordinate system with origin at the center of mass of the earth referred to the mean equinox and equator of date. We have

$$\left.\begin{aligned} w^k &= \sum_{\ell=1}^{3} N_{k\ell} \, v^\ell \\ v^k &= \sum_{\ell=1}^{3} N_{\ell k} \, w^\ell \end{aligned}\right\} \quad k = 1,2,3 \tag{69}$$

where from Ref. 6, p. 43, the orthogonal nutation matrix N is given by

$$\begin{bmatrix} N_{11} & N_{12} & N_{13} \\ N_{21} & N_{22} & N_{23} \\ N_{31} & N_{32} & N_{33} \end{bmatrix} = \begin{bmatrix} 1 & -\Delta\psi \cos\varepsilon & -\Delta\psi \sin\varepsilon \\ \Delta\psi \cos\varepsilon & 1 & -\Delta\varepsilon \\ \Delta\psi \sin\varepsilon & \Delta\varepsilon & 1 \end{bmatrix} \tag{70}$$

The nutation in longitude $\Delta\psi$ and nutation in obliquity $\Delta\varepsilon$ are given by trigonometric series in Ref. 6, pp. 44-45, with 69 terms and 40 terms, respectively. In PEP the nutation is determined by fourth difference interpolation from half day tabular interval tables read from magnetic tape (see Section IX-B-1). The true obliquity of the ecliptic ε is

$$\varepsilon = \varepsilon_o + \Delta\varepsilon \tag{71}$$

where by Ref. 6, p. 98, the mean obliquity of the ecliptic is

$$\varepsilon_o = 23°27'08''.26 - 46''.845T - 0''.0059T^2 + 0''.00181T^3 \tag{72}$$

with T being the time in Julian Centuries of 36525 ephemeris days from the epoch 1900 January 0.5 (J.E.D. 2415020.0).

Expression (70) for the nutation matrix ignores powers of $\Delta\psi$ and $\Delta\varepsilon$ higher than the first. According to Ref. 15, p. 74, the second order correction to be added to (70) is

$$\begin{bmatrix} -\frac{1}{2}\Delta\psi^2 & 0 & 0 \\ -\Delta\varepsilon\Delta\psi \sin\varepsilon & -\frac{1}{2}\left(\Delta\varepsilon^2 + \Delta\psi^2 \cos^2\varepsilon\right) & -\frac{1}{2}\Delta\psi^2 \sin\varepsilon \cos\varepsilon \\ +\Delta\varepsilon\Delta\psi \cos\varepsilon & -\frac{1}{2}\Delta\psi^2 \sin\varepsilon \cos\varepsilon & -\frac{1}{2}\left(\Delta\varepsilon^2 + \Delta\psi^2 \sin^2\varepsilon\right) \end{bmatrix} \tag{73}$$

The second order terms are less than 10^{-8} radians in magnitude, somewhat below the limit of accuracy of the nutation constant determined from fitting to data.

IV-D. Precession

Let (y^1, y^2, y^3) be the coordinate system with origin at the center of mass of the earth referred to the mean equinox and equator of date and let (x^1, x^2, x^3) be the coordinate system with origin at the center of mass of the earth referred to the mean equinox and equator of 1950.0. We have

$$\left.\begin{aligned} y^k &= \sum_{\ell=1}^{3} P_{k\ell}\, x^\ell \\ x^k &= \sum_{\ell=1}^{3} P_{\ell k}\, y^\ell \end{aligned}\right\} \quad k = 1,2,3 \tag{74}$$

where by Ref. 6, p. 31, the orthogonal precession matrix P is given by

$$\begin{aligned}
P_{11} &= \cos\zeta_o \cos\theta \cos z - \sin\zeta_o \sin z \\
P_{12} &= -\sin\zeta_o \cos\theta \cos z - \cos\zeta_o \sin z \\
P_{13} &= -\sin\theta \cos z \\
P_{21} &= \cos\zeta_o \cos\theta \sin z + \sin\zeta_o \cos z \\
P_{22} &= -\sin\zeta_o \cos\theta \sin z + \cos\zeta_o \cos z \\
P_{23} &= -\sin\theta \sin z \\
P_{31} &= \cos\zeta_o \sin\theta \\
P_{32} &= -\sin\zeta_o \sin\theta \\
P_{33} &= \cos\theta
\end{aligned} \tag{75}$$

By Ref. 7, p. 531, the angles in the above expressions are given by

$$\begin{aligned} \zeta_o &= 2304''.948T + 0''.302T^2 + 0''.0179T^3 \\ z &= 2304''.948T + 1''.093T^2 + 0''.0192T^3 \\ \theta &= 2004''.255T - 0''.426T^2 - 0''.0416T^3 \end{aligned} \tag{76}$$

where T is measured in tropical centuries of 36524.21988 ephemeris days from the epoch 1950.0 (J.E.D. 2433282.423) to the instant of interest.

Let τ denote the time from the epoch 1950.0 (J.E.D. 2433282.423) in units of 10,000 ephemeris days. Then by Taylor's theorem we have

$$P_{jk} = \sum_{n=o}^{\infty} \frac{1}{n!} \left. \frac{d^n P_{jk}}{d\tau^n} \right|_{\tau=o} \tau^n \quad , \quad j, k = 1,2,3 \tag{77}$$

Treating the coefficients in (76) as exact, some straightforward calculations show that the terms up to the fifth power in the Taylor expansion (77) are

$$\begin{aligned} P_{11} &= 1.0 - 2.22603398052517 \times 10^{-5}\tau^2 - 2.6903385325366 \times 10^{-9}\tau^3 \\ &\quad + 8.191221606878 \times 10^{-11}\tau^4 + 1.79948222850 \times 10^{-14}\tau^5 \\ P_{12} &= -6.119064710033514 \times 10^{-3}\tau - 5.06975739290688 \times 10^{-7}\tau^2 \\ &\quad + 4.5321716219079 \times 10^{-8}\tau^3 + 8.619581795926 \times 10^{-12}\tau^4 \\ &\quad - 1.02943658327 \times 10^{-13}\tau^5 \\ P_{13} &= -2.660399722772102 \times 10^{-3}\tau + 1.54818397804898 \times 10^{-7}\tau^2 \\ &\quad + 1.9729201591810 \times 10^{-8}\tau^3 + 1.960730253191 \times 10^{-12}\tau^4 \\ &\quad - 4.39298354075 \times 10^{-14}\tau^5 \end{aligned}$$

$$P_{21} = 6.119064710033514 \times 10^{-3}\tau + 5.06975739290688 \times 10^{-7}\tau^2 - 4.5321716219079 \times 10^{-8}\tau^3 - 9.636891635856 \times 10^{-12}\tau^4 + 1.02604298897 \times 10^{-13}\tau^5$$

$$P_{22} = 1.0 - 1.87214764627888 \times 10^{-5}\tau^2 - 3.1022173551368 \times 10^{-9}\tau^3 + 6.882478825535 \times 10^{-11}\tau^4 + 1.91215207447 \times 10^{-14}\tau^5$$

$$P_{23} = - 8.13957902909886 \times 10^{-6}\tau^2 - 5.8309700675934 \times 10^{-10}\tau^3 + 2.994360606802 \times 10^{-11}\tau^4 + 5.71739459043 \times 10^{-15}\tau^5$$

$$P_{31} = 2.660399722772102 \times 10^{-3}\tau - 1.54818397804898 \times 10^{-7}\tau^2 - 1.9729201591810 \times 10^{-8}\tau^3 + 3.791379581151 \times 10^{-13}\tau^4 + 4.50404085077 \times 10^{-14}\tau^5$$

$$P_{32} = - 8.13957902909886 \times 10^{-6}\tau^2 + 1.8168268497009 \times 10^{-10}\tau^3 + 3.024323052660 \times 10^{-11}\tau^4 + 2.58550054981 \times 10^{-17}\tau^5$$

$$P_{33} = 1.0 - 3.53886334246294 \times 10^{-6}\tau^2 + 4.1187882260017 \times 10^{-10}\tau^3 + 1.308742781343 \times 10^{-11}\tau^4 - 1.12669845971 \times 10^{-15}\tau^5 \qquad (78)$$

IV-E. Partial Derivatives of the Precession

IV-E-1. Present Expressions

In lieu of going back to first principles and fitting to data a numerically integrated ephemeris of the motion of the earth about its center of mass, we can solve for the parameters appearing in the presently accepted expressions for this motion. If we were fitting to optical data extending far back in time, we could solve for quantities which affect the precession. If we were fitting to a short arc of very accurate long baseline interferometry data we could solve for quantities which affect both the precession and nutation. However, we would then also

have to solve for the values of the wobble and A1-UT1, since the published values of these quantities depend on the presently accepted expressions for the precession and nutation. Thus, for the short arc of very accurate data it appears to be better to start over completely from first principles.

For a long arc of optical data we can solve for quantities that affect the precession, these being the precession constant h and with less sensitivity, the mean obliquity constant ε_o. The nominal value of these constants in 1950.0 are

$$\begin{aligned} h^o &= 5026''.75 \\ \varepsilon_o^{\,o} &= 23°26'44''.84 \end{aligned} \tag{79}$$

Then Ref. 17 gives that (76) should be modified as follows to show the depend ence of small changes of h and ε_o from the nominal values h^o, $\varepsilon_o^{\,o}$:

$$\begin{aligned} \zeta_o &= \left[2304''.948 + \frac{1}{2}\left(h \cos \varepsilon_o - h^o \cos \varepsilon_o^{\,o}\right)\right] T + 0''.302T^2 + 0''.0179T^3 \\ z &= \left[2304''.948 + \frac{1}{2}\left(h \cos \varepsilon_o - h^o \cos \varepsilon_o^{\,o}\right)\right] T + 1''.093\, T^2 + 0''.0192T^3 \\ \theta &= \left[2004''.255 + \left(h \sin \varepsilon_o - h^o \sin \varepsilon_o^{\,o}\right)\right] T - 0''.426T^2 - 0''.0416T^3 \end{aligned} \tag{80}$$

where T is measured in tropical centuries of 36524.21988 ephemeris days from the epoch 1950.0 (J.E.D. 2433282.423) to the instant of interest.

For the partial derivatives we have in dimensionless units of radians per radian

$$\begin{aligned} \frac{\partial \zeta_o}{\partial h} &= \frac{\partial z}{\partial h} = \frac{T}{2} \cos \varepsilon_o \approx 0.4589T \\ \frac{\partial \zeta_o}{\partial \varepsilon_o} &= \frac{\partial z}{\partial \varepsilon_o} = -\frac{hT}{2} \sin \varepsilon_o \approx -0.00486T \\ \frac{\partial \theta}{\partial h} &= T \sin \varepsilon_o \approx 0.3978T \\ \frac{\partial \theta}{\partial \varepsilon_o} &= hT \cos \varepsilon_o \approx 0.0223T \end{aligned} \tag{81}$$

The partial derivatives of the precession matrix with respect to h are

$$
\begin{aligned}
\frac{\partial P_{11}}{\partial h} &= P_{12}\frac{\partial \zeta_o}{\partial h} - P_{31}\cos z\frac{\partial \theta}{\partial h} - P_{21}\frac{\partial z}{\partial h} \\
\frac{\partial P_{12}}{\partial h} &= -P_{11}\frac{\partial \zeta_o}{\partial h} - P_{32}\cos z\frac{\partial \theta}{\partial h} - P_{22}\frac{\partial z}{\partial h} \\
\frac{\partial P_{13}}{\partial h} &= -\cos\theta\cos z\frac{\partial \theta}{\partial h} - P_{23}\frac{\partial z}{\partial h} \\
\frac{\partial P_{21}}{\partial h} &= P_{22}\frac{\partial \zeta_o}{\partial h} - P_{31}\sin z\frac{\partial \theta}{\partial h} + P_{11}\frac{\partial z}{\partial h} \\
\frac{\partial P_{22}}{\partial h} &= -P_{21}\frac{\partial \zeta_o}{\partial h} - P_{32}\sin z\frac{\partial \theta}{\partial h} + P_{12}\frac{\partial z}{\partial h} \\
\frac{\partial P_{23}}{\partial h} &= -\cos\theta\sin z\frac{\partial \theta}{\partial h} + P_{13}\frac{\partial z}{\partial h} \\
\frac{\partial P_{31}}{\partial h} &= \cos\zeta_o\cos\theta\frac{\partial \theta}{\partial h} + P_{32}\frac{\partial z}{\partial h} \\
\frac{\partial P_{32}}{\partial h} &= -\sin\zeta_o\cos\theta\frac{\partial \theta}{\partial h} - P_{31}\frac{\partial z}{\partial h} \\
\frac{\partial P_{33}}{\partial h} &= -\sin\theta\frac{\partial \theta}{\partial h}
\end{aligned}
\tag{82}
$$

The partials of P_{ij} with respect to ε_o have exactly the same form as above with partials with respect to h in the right sides of (82) being replaced by partials with respect to ε_o.

The obliquity constant affects the nutation as well as the precession, but we shall not bother to write down the partial derivatives of the nutation with respect to the obliquity since we shall probably only obtain useful results for the precession constant.

IV-E-2. Ad Hoc Rigid Rotations

We can parametrize errors in the presently accepted expressions for the precession without understanding the derivation of the expressions. Namely, instead of employing the matrix P defined in Section IV-D or IV-E-1, we use PD, where following Ref. 18, pp. 127-128, we write

$$D = \begin{bmatrix} D_{11} & D_{12} & D_{13} \\ D_{21} & D_{22} & D_{23} \\ D_{31} & D_{32} & D_{33} \end{bmatrix} = \begin{bmatrix} 1 & \dot{\psi}_3 T & -\dot{\psi}_2 T \\ -\dot{\psi}_3 T & 1 & \dot{\psi}_1 T \\ \dot{\psi}_2 T & -\dot{\psi}_1 T & 1 \end{bmatrix} \tag{83}$$

where T is measured in tropical centuries of 36524.21988 ephemeris days from the epoch 1950.0 (J.E.D. 2433282.423) and where $\dot{\psi}_1$, $\dot{\psi}_2$, $\dot{\psi}_3$ are the angular rates of rotation about the three (x^1, x^2, x^3) axes not accounted for in the presently accepted expressions for the precession. The matrix D is orthogonal if we can ignore the squares of the $\dot{\psi}_i T$ in radians, which is certainly true since we expect that any solution for the $\dot{\psi}_i$ arising from a fit to data would be on the order of a second of arc per century. We have

$$\frac{\partial D}{\partial \dot{\psi}_1} = \begin{bmatrix} 0 & 0 & 0 \\ 0 & 0 & T \\ 0 & -T & 0 \end{bmatrix}$$

$$\frac{\partial D}{\partial \dot{\psi}_2} = \begin{bmatrix} 0 & 0 & -T \\ 0 & 0 & 0 \\ T & 0 & 0 \end{bmatrix} \tag{84}$$

$$\frac{\partial D}{\partial \dot{\psi}_3} = \begin{bmatrix} 0 & T & 0 \\ -T & 0 & 0 \\ 0 & 0 & 0 \end{bmatrix}$$

V. EQUATIONS FOR EARTH SATELLITE MOTION

Let (x_e^1, x_e^2, x_e^3) be the coordinates of the earth in inertial space and let (x_b^1, x_b^2, x_b^3) be the coordinates of an earth satellite in inertial space. We take the coordinate directions to be referred to the mean equinox and equator of 1950.0. The components of the position of the satellite relative to the earth are

$$x^k = x_b^k - x_e^k \quad , \qquad k = 1,2,3$$
$$r = \left[\sum_{j=1}^{3} \left(x^j\right)^2\right]^{1/2} \tag{85}$$

The equation of motion of the earth and satellite in inertial space are

$$\left.\begin{aligned} \frac{d^2 x_e^k}{dt^2} &= F_e^k \\ \frac{d^2 x_b^k}{dt^2} &= -\frac{(\gamma M_e) x^k}{r^3} + F_b^k \end{aligned}\right\} \quad k = 1,2,3 \tag{86}$$

where γ is the gravitational constant, M_e the mass of the earth, F_e^k the components of the acceleration on the earth and F_b^k the components of the acceleration on the satellite not including the $1/r^2$ attraction of the earth. We assume that the mass of the satellite is completely negligible compared to the mass of the earth. Subtracting the first equation of (86) from the second we obtain the equations of motion of the satellite relative to the earth:

$$\frac{d^2 x^k}{dt^2} = -\frac{(\gamma M_e) x^k}{r^3} + \left(F_b^k - F_e^k\right) \quad , \qquad k = 1,2,3 \tag{87}$$

We now derive formulas for the perturbing accelerations $\left(F_b^{\,k} - F_e^{\,k}\right)$ due to a number of different effects.

V-A. Effects of Sun, Moon and Planets

We define, for $k = 1,2,3$,

M_s = mass of sun

M_m = mass of moon

M_e = mass of earth

$M_c = M_e + M_m$

M_p = mass of planet p

x^k_{me} = coordinate of moon relative to earth

x^k_{cs} = coordinate of earth-moon barycenter relative to sun

$$x^k_{se} = -x^k_{es} = -\left(x^k_{cs} - \frac{M_m}{M_c}\, x^k_{me}\right)$$

= coordinate of sun relative to earth

x^k_{ps} = coordinate of planet p relative to sun

$$x^k_{pe} = x^k_{ps} + x^k_{se}$$

= coordinate of planet relative to earth

$$x^k_{be} = x^k$$

= coordinate of satellite relative to earth

$$x^k_{\alpha b} = x^k_{\alpha e} - x^k_{be}$$

= coordinate of body α (= m, s or p) relative to satellite

$$r_{\alpha\beta} = \left(\sum_{j=1}^{3} x^j_{\alpha\beta}\right)^{1/2}$$

= distance between bodies α and β (α, β = m,s,p or b)

where all coordinates are referred to the mean equinox and equator of 1950.0. During the numerical integration of satellite motion PEP reads a magnetic tape and interpolates to determine x^k_{me}, x^k_{cs} and x^k_{ps} (for p = Mercury, Venus, Mars, Jupiter, Saturn, Uranus, Neptune, Pluto) at each numerical integration step time. Then the perturbing acceleration $\psi^k = F^k_b - F^k_e$ due to the sun, moon and planets is included in the integration of (87) via the formula

$$\psi^k = \gamma \sum_{\alpha=m,s,p} M_\alpha \left[\frac{x^k_{\alpha b}}{r^3_{\alpha b}} - \frac{x^k_{\alpha e}}{r^3_{\alpha e}} \right] \qquad k = 1,2,3 \tag{88}$$

There is an option of including or excluding any desired bodies. The effect of the sun and moon should always be included. Planetary effects could be important (especially for Venus and Juptiter).

V-B. Effect of Earth Gravitational Potential Harmonics

Let (u^1, u^2, u^3) be the coordinate system fixed in the earth described in Section IV. The transformation between these coordinates and those (x^1, x^2, x^3) referred to the mean equinox and equator of 1950.0 is given in (55).

We introduce polar coordinates (r, θ, ϕ) rotating with the earth by

$$\left.\begin{aligned} u^1 &= r \cos\theta \cos\phi & 0 &\le r < \infty \\ u^2 &= r \sin\theta \cos\phi & 0 &\le \theta < 2\pi \\ u^3 &= r \sin\phi & -\frac{\pi}{2} &\le \phi \le \frac{\pi}{2} \end{aligned}\right\} \tag{89}$$

We have

$$r^2 = \sum_{\ell=1}^{3} (x^\ell)^2 = \sum_{\ell=1}^{3} (u^\ell)^2 \tag{90}$$

$$\left.\begin{aligned} \sin\phi &= \frac{1}{r}\sum_{\ell=1}^{3} A_{3\ell}\, x^{\ell} \\ \cos\phi &= +\sqrt{1-\sin^2\phi} \end{aligned}\right\} \tag{91}$$

$$\left.\begin{aligned} \cos\theta &= \frac{1}{r\cos\phi}\sum_{\ell=1}^{3} A_{1\ell}\, x^{\ell} \\ \sin\theta &= \frac{1}{r\cos\phi}\sum_{\ell=1}^{3} A_{2\ell}\, x^{\ell} \end{aligned}\right\} \tag{92}$$

$$\left.\begin{aligned} \cos 2\theta &= \cos^2\theta - \sin^2\theta \\ \sin 2\theta &= 2\sin\theta\cos\theta \\ &\;\;\vdots \\ \cos h\theta &= \cos(h-1)\theta\cos\theta - \sin(h-1)\theta\sin\theta \\ \sin h\theta &= \sin(h-1)\theta\cos\theta + \cos(h-1)\theta\sin\theta \end{aligned}\right\} \tag{93}$$

Outside the earth the gravitational potential of the earth can be expressed in spherical harmonics by (see Ref. 19, pp. 1-7)

$$U = -\frac{\gamma M_e}{r}\left\{1 - \sum_{n=2}^{\infty} J_n\left(\frac{a_e}{r}\right)^n P_n(\sin\phi)\right.$$

$$+ \sum_{n=2}^{\infty}\sum_{h=1}^{n}\left(\frac{a_e}{r}\right)^n \left[C_{nh}\cos h\,\theta + S_{nh}\sin h\,\theta\right] \cdot$$

$$\left.\cdot\ P_{nh}(\sin\phi)\right\} \tag{94}$$

where P_n and P_{nh} are the Legendre polynomials and generalized Legendre functions, respectively, and where a_e is the mean equatorial radius of the earth. The J_n (units a_e^n) are called the zonal harmonic coefficients and the C_{nh}, S_{nh} (units a_e^n) are called the tesseral cosine and sine coefficients. C_{nn} and S_{nn} are also known as sectorial harmonic coefficients. The summation in (94) starts with $n = 2$ rather than with $n = 1$ because the origin of the coordinate system is at the center of mass of the earth. Since to a high degree of approximation the u^3 axis is a principal moment of inertia axis, we have

$$C_{21} = 0 \quad , \quad S_{21} = 0 \tag{95}$$

By Ref. 20 pp. 83 and 327, we have

$$\left.\begin{aligned} P_o(Z) &= 1 \\ P_n(Z) &= \frac{1}{2^n n!}\,\frac{d^n\left(Z^2-1\right)^n}{dZ^n} \qquad n = 1,2,\ldots \end{aligned}\right\} \tag{96}$$

$$\left.\begin{aligned} P_{no}(Z) &= P_n(Z) & n &= 0, 1, 2, \ldots \\ P_{nh}(Z) &= \left(1 - Z^2\right)^{h/2} \frac{d^h}{dZ^h} P_n(Z) & h &= 1, \ldots, n \end{aligned}\right\} \tag{97}$$

From these definitions it follows that

$$P_n(Z) = \sum_{i=o}^{\left[\frac{n}{2}\right]} (-1)^i \frac{(2n - 2i)!}{2^n (n - i)! (n - 2i)! i!} Z^{n-2i} \tag{98}$$

$$P_{nh}(Z) = \left(1 - Z^2\right)^{h/2} \sum_{i=o}^{\left[\frac{n-h}{2}\right]} \frac{(2n - 2i)!}{2^n (n - i)! (n - h - 2i)! i!} Z^{n-h-2i} \tag{99}$$

where $[m]$ denotes the largest integer less than or equal to m. In Section IX-D we give recursive formulas for evaluating P_n and P_{nh} and their derivatives on a computer.

We define

$$\left.\begin{aligned} \overline{P}_{nh} &= \sqrt{\frac{2(2n + 1)(n - h)!}{(n + h)!}}\, P_{nh} & h &= 1, \ldots, n \\ \overline{P}_{no} &= \sqrt{2n + 1}\, P_{no} & n &= 0, 1, 2, \ldots \end{aligned}\right\} \tag{100}$$

According to Ref. 19, p. 7, the integrals of $\overline{P}_{nh} \times \begin{Bmatrix}\cos h\,\theta \\ \sin h\,\theta\end{Bmatrix}$ over the (θ, ϕ) sphere are 4π. If the $\overline{P}_{nh}$ are used in (94) in place of the P_{nh} and P_n, we would use the normalized coefficients

$$\left.\begin{aligned} \overline{C}_{nh} &= \sqrt{\frac{(n + h)!}{2(2n + 1)(n - h)!}}\, C_{nh} \\ \overline{C}_{no} &= -\frac{J_n}{\sqrt{2n + 1}} \end{aligned}\right\} \tag{101}$$

It seems to be customary to normalize to 4π rather than 1 when dealing with the gravitational potential. We shall follow the convention of the Smithsonian Astrophysical Observatory (Ref. 10) and use $\overline{C}_{nh}$, $\overline{S}_{nh}$, $\overline{P}_{nh}$ instead of C_{nh}, S_{nh}, P_{nh} for $h = 1, \ldots, n$, but retain J_n, P_n for $h = 0$.

Tables VI and VII contain the values of the earth gravitational harmonic coefficients resulting from the latest available fit to earth satellite and gravity field data by the Smithsonian Astrophysical Observatory (see Ref. 10). The values of fundamental constants used in obtaining these Smithsonian results are

$$\left.\begin{aligned} \gamma M_e &= 3.986013 \times 10^5 \ \mathrm{km}^3/\mathrm{sec}^2 \\ a_e &= 6378.155 \ \mathrm{km} \\ c &= 2.997925 \times 10^5 \ \mathrm{km/sec} \end{aligned}\right\} \qquad (102)$$

TABLE VI

1969 SMITHSONIAN STANDARD EARTH ZONAL HARMONICS (see Ref. 10)

n	$J_n \times 10^6$	$\overline{C}_{no} \times 10^6$	n	$J_n \times 10^6$	$\overline{C}_{no} \times 10^6$
2	1082.628	- 484.16596	12	- 0.042	0.00840
3	- 2.538	0.95927	13	- 0.123	0.02367
4	- 1.593	0.53100	14	- 0.073	0.01356
5	- 0.230	0.06935	15	- 0.174	0.03125
6	0.502	- 0.13923	16	0.187	- 0.03255
7	- 0.362	0.09347	17	0.085	- 0.01437
8	- 0.118	0.02862	18	- 0.231	0.03798
9	- 0.100	0.02294	19	- 0.216	0.03459
10	- 0.354	0.07725	20	- 0.005	0.00078
11	0.202	- 0.04212	21	0.144	- 0.02196

TABLE VII

1969 SMITHSONIAN STANDARD EARTH TESSERAL HARMONICS
(See Ref. 10)

n	h	$\bar{C}_{nh}$	$\bar{S}_{nh}$	C_{nh}	S_{nh}
2	2	2.4129E-06	-1.3641E-06	1.5575E-06	-8.8052E-07
3	1	1.9698E-06	2.6015E-07	2.1276E-06	2.8099E-07
3	2	8.9204E-07	-6.3468E-07	3.0469E-07	-2.1678E-07
3	3	6.8630E-07	1.4304E-06	9.5700E-08	1.9946E-07
4	1	-5.2989E-07	-4.8765E-07	-5.0270E-07	-4.6263E-07
4	2	3.3024E-07	7.0633E-07	7.3844E-08	1.5794E-07
4	3	9.8943E-07	-1.5467E-07	5.9130E-08	-9.2433E-09
4	4	-7.9692E-08	3.3928E-07	-1.6838E-09	7.1686E-09
5	1	-5.3816E-08	-9.7904E-08	-4.6085E-08	-8.3840E-08
5	2	6.1286E-07	-3.5087E-07	9.9182E-08	-5.6783E-08
5	3	-4.3083E-07	-8.6663E-08	-1.4232E-08	-2.8629E-09
5	4	-2.6693E-07	8.3010E-08	-2.0784E-09	6.4634E-10
5	5	1.2593E-07	-5.9910E-07	3.1007E-10	-1.4751E-09
6	1	-9.8984E-08	3.7652E-08	-7.7880E-08	2.9624E-08
6	2	5.4825E-08	-3.5175E-07	6.8204E-09	-4.3759E-08
6	3	2.7873E-08	4.4626E-08	5.7792E-10	9.2527E-10
6	4	-4.0342E-10	-4.0388E-07	-1.5271E-12	-1.5289E-09
6	5	-2.1143E-07	-5.2264E-07	-1.7064E-10	-4.2180E-10
6	6	8.8693E-08	-7.4756E-08	2.0664E-11	-1.7417E-11
7	1	2.4142E-07	1.1567E-07	1.7670E-07	8.4662E-08
7	2	2.8306E-07	1.5645E-07	2.8193E-08	1.5583E-08
7	3	2.0285E-07	-2.3448E-07	2.8573E-09	-3.3029E-09
7	4	-1.9727E-07	-1.1390E-07	-4.1891E-10	-2.4187E-10
7	5	-8.7024E-10	9.8461E-08	-3.0800E-13	3.4847E-11
7	6	-2.5847E-07	1.0209E-07	-1.7940E-11	7.0860E-12
7	7	1.5916E-07	-6.7710E-08	2.9525E-12	-1.2561E-12
8	1	3.1254E-08	2.5696E-08	2.1477E-08	1.7658E-08
8	2	4.8161E-08	8.4140E-08	3.9557E-09	6.9108E-09
8	3	-5.7444E-08	1.8086E-08	-5.8076E-10	1.8285E-10
8	4	-1.5378E-07	7.5264E-08	-2.0071E-10	9.8234E-11
8	5	-5.6733E-08	6.1636E-08	-1.0269E-11	1.1156E-11
8	6	-5.3903E-08	2.5930E-07	-1.5054E-12	7.2419E-12
8	7	3.4390E-08	8.9168E-08	1.7536E-13	4.5467E-13
8	8	-7.7364E-08	6.7607E-08	-9.8621E-14	8.6183E-14
9	1	1.3823E-07	-1.6100E-08	8.9820E-08	-1.0462E-08
9	2	6.6741E-09	-8.1733E-08	4.6230E-10	-5.6614E-09
9	3	-9.6463E-08	-1.1817E-07	-7.2904E-10	-8.9309E-10
9	4	5.7125E-08	1.1183E-07	4.8884E-11	9.5697E-11
9	5	-6.1435E-09	3.3551E-09	-6.2836E-13	3.4316E-13
9	6	2.4186E-08	2.2028E-07	3.1936E-13	2.9087E-12
9	7	-5.0450E-08	-1.2699E-07	-9.6152E-14	-2.4203E-13
9	8	2.3359E-07	5.7239E-08	7.6350E-14	1.8709E-14
9	9	-8.2490E-08	9.2326E-08	-6.3551E-15	7.1129E-15
10	1	1.1251E-07	-1.0167E-07	6.9521E-08	-6.2823E-08
10	2	-3.1225E-08	-1.0450E-07	-1.8566E-09	-6.2134E-09
10	3	-2.3346E-08	-1.4137E-07	-1.3612E-10	-8.2425E-10
10	4	-4.8185E-08	-4.3248E-08	-2.8379E-11	-2.5471E-11
10	5	-8.0004E-08	-1.4279E-07	-4.9668E-12	-8.8647E-12

TABLE VII (Cont'd.)

n	h	$\bar{C}_{nh}$	$\bar{S}_{nh}$	C_{nh}	S_{nh}
10	6	-3.2486E-08	-2.0153E-07	-2.2548E-13	-1.3988E-12
10	7	5.4961E-08	3.2002E-08	4.6262E-14	2.6937E-14
10	8	7.3957E-08	-7.9706E-08	8.4713E-15	-9.1298E-15
10	9	-6.8563E-09	6.2498E-09	-1.2740E-16	1.1613E-16
10	10	1.2377E-07	-2.5885E-08	5.1425E-16	-1.0755E-16
11	1	4.3899E-09	2.9751E-08	2.5915E-09	1.7563E-08
11	2	4.8900E-08	-9.1994E-08	2.5318E-09	-4.7630E-09
11	3	-6.3247E-08	-1.3109E-07	-2.9173E-10	-6.0465E-10
11	4	-3.0193E-08	5.4317E-08	-1.2713E-11	2.2871E-11
11	5	3.2523E-08	1.3215E-07	1.2940E-12	5.2578E-12
11	6	3.7517E-08	6.9005E-09	1.4780E-13	2.7184E-14
11	7	4.5726E-08	-1.3862E-07	1.8988E-14	-5.7563E-14
11	8	6.4546E-08	-1.6993E-08	3.0745E-15	-8.0943E-16
11	9	1.1750E-07	-9.9451E-09	7.2255E-16	-6.1156E-17
11	10	-1.1736E-07	-1.8900E-08	-1.1136E-16	-1.7934E-17
11	11	1.1785E-07	-4.0688E-08	2.3841E-17	-8.2312E-18
12	1	-4.5955E-08	-3.1000E-08	-2.6017E-08	-1.7550E-08
12	2	2.7481E-08	7.5986E-08	1.2537E-09	3.4665E-09
12	3	5.8385E-08	5.4784E-08	2.1748E-10	2.0407E-10
12	4	-4.3649E-08	-2.2262E-08	-1.3549E-11	-6.9103E-12
12	5	2.3375E-08	4.2637E-08	6.2218E-13	1.1349E-12
12	6	-2.3868E-08	-6.6770E-10	-5.6597E-14	-1.5833E-15
12	7	1.4507E-08	9.9784E-08	3.2219E-15	2.2161E-14
12	8	-5.7854E-09	3.3752E-08	-1.2849E-16	7.4960E-16
12	9	-3.2231E-08	4.2858E-08	-7.8102E-17	1.0385E-16
12	10	-1.8590E-08	4.8382E-09	-5.5449E-18	1.4431E-18
12	11	-4.4921E-08	-4.8205E-08	-1.9755E-18	-2.1200E-18
12	12	-1.9407E-08	-5.7771E-08	-1.7422E-19	-5.1861E-19
13	1	-5.6042E-08	2.6288E-08	-3.0526E-08	1.4319E-08
13	2	-4.7456E-08	1.7367E-08	-1.9267E-09	7.0510E-10
13	3	2.3833E-08	-2.8930E-08	7.2937E-11	-8.8535E-11
13	4	-1.9980E-08	5.7030E-08	-4.6896E-12	1.3386E-11
13	5	9.6637E-08	-4.7760E-08	1.7821E-12	-8.8075E-13
13	6	-8.3417E-08	5.9782E-08	-1.2477E-13	8.9420E-14
13	7	-5.2217E-08	-3.2562E-09	-6.6010E-15	-4.1163E-16
13	8	-4.1759E-08	-2.0231E-08	-4.7029E-16	-2.2784E-16
13	9	-2.5622E-08	1.0767E-07	-2.7513E-17	1.1561E-16
13	10	8.6589E-08	-1.0528E-08	9.6937E-18	-1.1786E-18
13	11	-3.3749E-08	5.8541E-08	-4.4527E-19	7.7236E-19
13	12	-1.3229E-09	8.2192E-08	-2.4683E-21	1.5336E-19
13	13	-7.0288E-08	7.4643E-08	-2.5720E-20	2.7313E-20
14	1	-2.3090E-08	4.9664E-08	-1.2135E-08	2.6100E-08
14	2	3.2120E-08	-4.5289E-08	1.1704E-09	-1.6503E-09
14	3	1.9042E-08	1.1919E-09	4.8581E-11	3.0409E-12
14	4	7.8016E-09	-3.7527E-08	1.4145E-12	-6.8041E-12
14	5	-2.5958E-08	-2.3344E-08	-3.4144E-13	-3.0706E-13
14	6	1.9140E-08	-5.8721E-08	1.8765E-14	-5.7571E-14
14	7	1.1061E-08	8.4132E-09	8.3666E-16	6.3638E-16
14	8	-3.0273E-08	-6.0838E-08	-1.8452E-16	-3.7083E-16
14	9	4.9538E-08	9.2345E-08	2.5704E-17	4.7915E-17

TABLE VII (Cont'd.)

n	h	$\bar{C}_{nh}$	$\bar{S}_{nh}$	C_{nh}	S_{nh}
14	10	5.3732E-08	-4.3168E-08	2.5451E-18	-2.0447E-18
14	11	2.7833E-08	-8.1637E-08	1.3183E-19	-3.8668E-19
14	12	1.2481E-08	-5.7314E-08	6.6937E-21	-3.0738E-20
14	13	5.1554E-08	4.5453E-08	3.7626E-21	3.3173E-21
14	14	-5.2082E-08	-1.2840E-08	-7.1834E-22	-1.7710E-22
15	1	-3.5971E-09	4.0142E-08	-1.8283E-09	2.0403E-08
15	2	-4.4833E-08	-1.6056E-08	-1.4771E-09	-5.2898E-10
15	3	8.3016E-09	-5.7218E-09	1.7880E-11	-1.2323E-11
15	4	1.3916E-08	6.6644E-08	1.9849E-12	9.5058E-12
15	5	3.1684E-08	1.8250E-09	3.0469E-13	1.7550E-14
15	6	7.0020E-08	-1.1872E-07	4.6465E-14	-7.8782E-14
15	7	1.1856E-07	4.2690E-08	5.5913E-15	2.0133E-15
15	8	-9.7657E-08	-3.5710E-08	-3.3952E-16	-1.2415E-16
15	9	2.2064E-08	2.6632E-08	5.9183E-18	7.1435E-18
15	10	-2.0648E-08	5.3724E-10	-4.5221E-19	1.1766E-20
15	11	-3.2585E-08	9.4052E-08	-6.2591E-20	1.8066E-19
15	12	1.0524E-08	6.8726E-09	1.9452E-21	1.2703E-21
15	13	-3.7348E-08	4.0249E-09	-7.5320E-22	8.1170E-23
15	14	1.2192E-08	-2.6786E-08	3.2285E-23	-7.0931E-23
15	15	1.4514E-09	-1.4802E-08	7.0170E-25	-7.1563E-24
16	1	-2.3789E-08	7.6413E-08	-1.1718E-08	3.7640E-08
16	2	2.1327E-08	3.0669E-08	6.3935E-10	9.1940E-10
16	3	-4.7358E-08	3.2610E-08	-8.7048E-11	5.9940E-11
16	4	-1.1591E-08	4.3001E-08	-1.3213E-12	4.9018E-12
16	5	-4.4201E-08	3.2230E-08	-3.1740E-13	2.3144E-13
16	6	-5.8439E-08	-4.2809E-08	-2.6976E-14	-1.9761E-14
16	7	1.0591E-07	8.1008E-09	3.2236E-15	2.4657E-16
16	8	-8.4738E-08	-2.4677E-09	-1.7549E-16	-5.1106E-18
16	9	9.0001E-09	-1.0628E-07	1.3180E-18	-1.5564E-17
16	10	-2.9849E-08	-5.2467E-10	-3.2401E-19	-5.6953E-21
16	11	6.8502E-09	-7.0765E-08	5.8422E-21	-6.0352E-20
16	12	2.2834E-08	-3.4087E-08	1.6458E-21	-2.4569E-21
16	13	3.5475E-08	2.0683E-08	2.3741E-22	1.3842E-22
16	14	-7.3590E-09	-2.2626E-08	-5.1913E-24	-1.5961E-23
16	15	-3.5485E-08	8.4126E-10	-3.1791E-24	7.5369E-26
16	16	-2.9522E-08	8.6217E-09	-4.6755E-25	1.3655E-25
17	12	8.3097E-08	3.5424E-09	2.5613E-21	1.0919E-22
17	13	3.2749E-08	4.2920E-10	8.2418E-23	1.0801E-24
17	14	-1.6058E-08	2.7286E-08	-3.6292E-24	6.1667E-24
18	12	1.1662E-08	8.4724E-09	1.6528E-22	1.2008E-22
18	13	4.6903E-09	-3.5547E-08	4.8741E-24	-3.6940E-23
18	14	-2.7446E-08	-4.8376E-08	-2.2548E-24	-3.9743E-24
19	12	6.7115E-08	-8.2623E-09	4.6406E-22	-5.7128E-23
19	13	3.3201E-08	-6.3128E-08	1.5338E-23	-2.9164E-23
19	14	-3.9779E-09	-2.3817E-08	-1.3060E-25	-7.8196E-25
20	13	5.8374E-08	3.3320E-08	1.2735E-23	7.2692E-24
20	14	1.1130E-08	-1.6183E-08	1.5739E-25	-2.2885E-25
21	13	3.6928E-09	-1.6288E-08	4.0021E-25	-1.7652E-24
21	14	5.2067E-08	3.0801E-10	3.3722E-25	1.9949E-27
22	14	-8.0549E-09	2.6440E-08	-2.5158E-26	8.2580E-26

Slightly different values of earth harmonics would be obtained with our slightly different values for these quantities [see (26), (27) and (194)], but the difference is completely insignificant. The harmonic coefficients could have time variations, in particular, seasonal variations. These would be small, but not necessarily smaller than the accuracy of the results in Tables VI and VII obtained assuming constant harmonic coefficients.

The force on the satellite due to the gravitational attraction of the earth is $-M_b$ grad U, where M_b is the mass of the satellite. By the law of action and reaction the negative of this force acts on the earth. The acceleration on the earth is this force divided by M_e, so that the acceleration acting on the earth contains a factor M_b and hence can be considered 0 . Thus we have $(F_b - F_e) = F_b$, so that the term on the right side of (87) due to the higher harmonics in the gravitational field of the earth is (using the Smithsonian normalization)

$$
\begin{aligned}
H_e^k &= -\frac{\partial U}{\partial x^k} + \frac{\gamma M_e x^k}{r^3} \\
&= \gamma M_e \sum_{n=2}^{\infty} \left(\frac{a_e}{r}\right)^n \left[\frac{J_n}{r^2} \frac{(n+1)x^k}{r} P_n(\sin\phi) - P_n'(\sin\phi)\, r \frac{\partial \sin\phi}{\partial x^k}\right] \\
&+ \gamma M_e \sum_{n=2}^{\infty} \sum_{h=1}^{n} \left(\frac{a_e}{r}\right)^n \frac{1}{r^2} \left\{\left[\bar{C}_{nh} \cos h\theta\right.\right. \\
&+ \left.\bar{S}_{nh} \sin h\theta\right] \cdot \left[-\frac{(n+1)x^k}{r} \bar{P}_{nh}(\sin\phi)\right. \\
&+ \left.\bar{P}'_{nh}(\sin\phi)\, r \frac{\partial \sin\phi}{\partial x^k}\right] + h\left[-\bar{C}_{nh} \sin h\theta\right. \\
&+ \left.\left.\bar{S}_{nh} \cos h\theta\right] \cdot \bar{P}_{nh}(\sin\phi) \cdot r \frac{\partial\theta}{\partial x^k}\right\} \qquad (103)
\end{aligned}
$$

where by (91)

$$r \frac{\partial \sin \phi}{\partial x^k} = A_{3k} - \frac{x^k}{r} \sin \phi \tag{104}$$

and by (92)

$$- \sin \theta \frac{\partial \theta}{\partial x^k} = \frac{1}{r \cos \phi} A_{1k} - \frac{1}{\cos \phi} \frac{\partial \cos \phi}{\partial x^k} \cos \theta - \frac{x^k}{r^2} \cos \theta$$

$$\cos \theta \frac{\partial \theta}{\partial x^k} = \frac{1}{r \cos \phi} A_{2k} - \frac{1}{\cos \phi} \frac{\partial \cos \phi}{\partial x^k} \sin \theta - \frac{x^k}{r^2} \sin \theta$$

Multiplying the first equation by $- \sin \theta$ and the second by $\cos \theta$ and adding we obtain

$$r \frac{\partial \theta}{\partial x^k} = \frac{1}{\cos \phi} \left[A_{2k} \cos \theta - A_{1k} \sin \theta \right] \tag{105}$$

If the satellite had an appreciable mass M_b we would just replace the factor γM_e in (103) and also in (87) by

$$\gamma M_e \left(1 + \frac{M_b}{M_e} \right) \tag{106}$$

For a large satellite, such as the Moon, we would also have the effect of the satellite's gravitational potential higher harmonics acting back on the earth with interactions between the earth's and satellite's harmonic expansions (see Ref. 1, Section III-E.).

V-C. Effect of Moon Gravitational Potential Harmonics

Let (q^1, q^2, q^3) be a coordinate system with origin at the center of mass of the moon with axes along the principle axes of inertia of the moon. The q^3 axis points along the axis of rotation of the moon and the q^1 axis always points in the general direction of the earth, the period of rotation of the moon about its center of mass being the same as its orbital period. The

transformation between this coordinate system and the one (x^1, x^2, x^3) with origin at the center of mass of the moon referred to the mean equinox and equator (of the earth) of 1950.0 is

$$\left.\begin{aligned} q^k &= \sum_{\ell=1}^{3} B_{k\ell}\, x^{\ell} \\ x^k &= \sum_{\ell=1}^{3} B_{\ell k}\, q^{\ell} \end{aligned}\right\} \quad k = 1,2,3 \tag{107}$$

where formulas for the orthogonal matrix B are given in Ref. 1, Appendix B, using Casini's laws and the moon's physical libration.

We recall some definitions from the start of Section V for $k = 1,2,3$:

- $x^k_{em} = x^k_{me}$ = coordinate of moon relative to earth
- $x^k_{bm} = x^k_{mb}$ = coordinate of moon relative to satellite

The gravitational potential of the moon looks like (94) with a_m (the mean radius of the moon) replacing a_e and B replacing A in (91) and (92). Thus the acceleration on the motion of the satellite relative to the earth $H^k_m = (F^k_b - F^k_e)$ due to the higher harmonics of the moon's gravitational potential is

$$H^k_m = H^k_{bm} - H^k_{em} \tag{108}$$

where for $\alpha = b,e$

$$
\begin{aligned}
H^k_{\alpha m} = \; & \gamma M_m \sum_{n=2}^{\infty} \left(\frac{a_m}{r_{\alpha m}}\right)^n \frac{J_n}{r^2_{\alpha m}} \left[\frac{(n+1)\, x^k_{\alpha m}}{r_{\alpha m}} P_n (\sin \phi_\alpha) \right. \\
& \left. - P'_n (\sin \phi_\alpha)\, r_{\alpha m} \frac{\partial \sin \phi_\alpha}{\partial x^k_{\alpha m}} \right] \\
& + \gamma M_m \sum_{n=2}^{\infty} \sum_{h=1}^{n} \left(\frac{a_m}{r_{\alpha m}}\right)^n \frac{1}{r^2_{\alpha m}} \left\{ \left[\bar{C}_{nh} \cos h\, \theta_\alpha \right. \right. \\
& \left. + \bar{S}_{nh} \sin h\, \theta_\alpha \right] \cdot \left[- \frac{(n+1)\, x^k_{\alpha m}}{r_{\alpha m}} \bar{P}_{nh} (\sin \phi_\alpha) \right. \\
& \left. + \bar{P}'_{nh} (\sin \phi_\alpha)\, r_{\alpha m} \frac{\partial \sin \phi_\alpha}{\partial x^k_{\alpha m}} \right] + h \left[- \bar{C}_{nh} \sin h\, \theta_\alpha \right. \\
& \left. \left. + \bar{S}_{nh} \cos h\, \theta_\alpha \right] \cdot \bar{P}_{nh} (\sin \phi_\alpha)\, r_{\alpha m} \frac{\partial \theta_\alpha}{\partial x^k_{\alpha m}} \right\}
\end{aligned}
\tag{109}
$$

$$
\left.
\begin{aligned}
\sin \phi_\alpha &= \frac{1}{r_{\alpha m}} \sum_{\ell=1}^{3} B_{3\ell}\, x^\ell_{\alpha m} \\
\cos \phi_\alpha &= + \sqrt{1 - \sin^2 \phi_\alpha}
\end{aligned}
\right\}
\tag{110}
$$

$$
\left.
\begin{aligned}
\cos \theta_\alpha &= \frac{1}{r_{\alpha m} \cos \phi_\alpha} \sum_{\ell=1}^{3} B_{1\ell}\, x^\ell_{\alpha m} \\
\sin \theta_\alpha &= \frac{1}{r_{\alpha m} \cos \phi_\alpha} \sum_{\ell=1}^{3} B_{2\ell}\, x^\ell_{\alpha m}
\end{aligned}
\right\}
\tag{111}
$$

$$
r_{\alpha m} \frac{\partial \sin \phi_\alpha}{\partial x^k_{\alpha m}} = B_{3k} - \frac{x^k_{\alpha m}}{r_{\alpha m}} \sin \phi_\alpha
\tag{112}
$$

$$r_{\alpha m} \frac{\partial \theta_\alpha}{\partial x^k_{\alpha m}} = \frac{1}{\cos \phi} \left[B_{2k} \cos \theta_\alpha - B_{1k} \sin \theta_\alpha \right] \tag{113}$$

Probably the only lunar harmonics worth considering for calculating perturbations on earth satellite orbits are the second order ones, if even these. According to Ref. 21 (fit JPL-6) we have

$$\begin{aligned} J_2 &= 2.0010 \times 10^{-4} \; (\bar{C}_{20} = - \; 0.8949 \times 10^{-4}) \\ \bar{C}_{22} &= 0.3498 \times 10^{-4} \; (C_{22} = 0.2258 \times 10^{-4}) \end{aligned} \tag{114}$$

where $C_{21} = 0$, $S_{21} = 0$, $S_{22} = 0$ if the coordinate system (q^1, q^2, q^3) is really oriented along the principle moment of inertia axes of the moon. The parameter values assumed in Ref. 21 in determining these harmonics are

$$\begin{aligned} \gamma M_m &= 4902.78 \;\; km^3/sec^2 \\ a_m &= 1738 \text{ km} \end{aligned} \tag{115}$$

Using the values (20) and (25) for PEP fundamental parameters we obtain

$$\gamma M_m = 4902.78 \pm 0.6 \;\; km^3/sec^2 \tag{116}$$

V-D. Effect of Second Harmonic of Sun's Gravitational Potential

Let (q^1, q^2, q^3) be a coordinate system fixed in the sun with q^3 axis along the axis of rotation of the sun. The definition of the other two axes is unimportant for our purposes. The transformation between these coordinates and those (x^1, x^2, x^3) referred to the mean equinox and equator (of the earth) of 1950.0 can be written as

$$\left.\begin{aligned} q^k &= \sum_{\ell=1}^{3} C_{k\ell}\, x^{\ell} \\ x^k &= \sum_{\ell=1}^{3} C_{\ell k}\, q^{\ell} \end{aligned}\right\} \qquad k = 1, 2, 3 \tag{117}$$

The only coefficients of interest to us are by Ref. 1, Appendix C,

$$\begin{aligned} C_{31} &= \sin \Omega_s \sin I_s \\ C_{32} &= -\cos \Omega_s \sin I_s \cos \bar{\varepsilon} - \cos I_s \sin \bar{\varepsilon} \\ C_{33} &= -\cos \Omega_s \sin I_s \sin \bar{\varepsilon} + \cos I_s \cos \bar{\varepsilon} \end{aligned} \tag{118}$$

where

I_s = inclination of solar equator to ecliptic

= $7°15' = 7\overset{\circ}{.}25$

Ω_s = longitude of ascending node of solar equator on ecliptic measured from mean equinox of 1950.0

= $75°3\overset{'}{.}75 = 75\overset{\circ}{.}0625$

$\bar{\varepsilon}$ = mean inclination of ecliptic at 1950.0

= $23°26'44\overset{''}{.}84 = 23\overset{\circ}{.}4458$

By Ref. 1, pp. 28-30, the acceleration due to the second harmonic J_2 of the sun's gravitational potential on body α (= b,e) in inertial space is

$$S_\alpha^k = \gamma M_s \left(\frac{a_s}{r_{\alpha s}}\right)^2 \frac{J_2}{r_{\alpha s}^2} \left[\frac{x_{\alpha s}^k}{r_{\alpha s}^2}\left(\frac{15}{2} g_\alpha^2 - \frac{3}{2}\right) - 3 g_\alpha C_{3k}\right] , \qquad k = 1,2,3 \tag{119}$$

where J_2 is in units of the sun radius squared and where

$$a_s = \text{sun equatorial radius}$$
$$= 696{,}000 \text{ km}$$

$$g_\alpha = \sum_{\ell=1}^{3} C_{3\ell} \frac{x_{\alpha s}^{\ell}}{r_{\alpha s}} \tag{120}$$

The acceleration on the motion of an earth satellite relative to the earth due to the second harmonic of the sun's gravitational potential to be added to (87) is

$$S^k = S_b^k - S_e^h \qquad k = 1,2,3 \tag{121}$$

It is not worth considering the effect of additional solar gravitational potential harmonics since it is difficult to even discern the effect of J_2 on the motion of a planet. J_2 is probably about 10^{-5} (solar radii)^2 or less. The mean distance of the earth to the sun is 215 solar radii and the effect of the sun's harmonics on an earth satellite is a differential one, so even the effect of J_2 is probably not worth considering, except that it was easy enough to write down the formula.

V-E. Effect of General Relativity

The effects of general relativity on earth satellite motion additional to the Newtonian gravitational effects can be classified as follows in the order of their importance for a low earth satellite: (i) due to Schwarzschild metric of the earth, (ii) due to the rotation of the earth, (iii) due to the differential effect of the sun's Schwarzschild metric, and (iv) due to the moon, planets and rotation of the sun. These last effects (iv) can pretty much be ignored. For a far out earth satellite, such as the moon, effect (iii) is the most important (1.9 seconds of arc advance of the ascending node on the ecliptic per century) and is in fact programmed in PEP for the moon using the formula in Ref. 3, pp. 28-29. The programming of the effect of general

relativity for an arbitrary earth satellite (up to 3.3 seconds of arc per year advance of the perigee for a low earth satellite) we leave to the future.

When this coding is added to PEP, the formulas used should be those which arise in harmonic coordinates, since the harmonic coordinate system defined in Ref. 11, p. 132, is the one used throughout PEP. It does not matter what coordinate system is employed, as long as the same one is used in numerically integrating the equations of motion as is used in calculating the theoretical value of observables (see Section VII-B-1).

The effect of general relativity on the motion of a planet due to the Schwarzschild metric of the sun is programmed in PEP in harmonic coordinates using the formula in Ref. 1, p. 50.

V-F. Non-Gravitational Effects

It is difficult to completely model the effects of non-gravitational forces. The parts of these effects which are not modeled can ruin the detection of other effects, such as those due to general relativity or earth gravitational potential harmonics, unless the non-gravitational forces can (a) be measured for exact inclusion in the numerical integration of the equations of motion or (b) be compensated for so they can be ignored in the numerical integration of the equations of motion.

Goal (a) can be achieved by flying a sensitive three-axis accelerometer aboard the spacecraft. Goal (b) can be achieved by using a pea-in-a-pod approach. Namely, inside a hollow spacecraft a small solid sphere (pea) is placed which is not subject to non-gravitational forces. The surrounding spacecraft is subject to non-gravitational acceleration, so that the pea will approach the walls of the surrounding spacecraft. If such an approach were detected, thrusters could be fired to move the surrounding spacecraft so that the pea is centered. The net effect is to cancel the non-gravitational forces acting on the spacecraft.

Lacking such sophisticated techniques we must model the non-gravitational accelerations as best we can, realizing that for certain accurate applications we could never completely account for these effects. In the following we discuss models for some of these forces that are programmed in PEP.

V-F-1. Radiation Pressure

Let (z^1, z^2, z^3) be the coordinate system with origin at the center of mass of the satellite referred to the mean equinox and equator of 1950.0. Let (z^1_*, z^2_*, z^3_*) be a reference system fixed in the satellite with origin at the center of mass of the satellite. We write

$$\begin{pmatrix} z^1 \\ z^2 \\ z^3 \end{pmatrix} = D \begin{pmatrix} z^1_* \\ z^2_* \\ z^3_* \end{pmatrix}, \quad \begin{pmatrix} z^1_* \\ z^2_* \\ z^3_* \end{pmatrix} = D^t \begin{pmatrix} z^1 \\ z^2 \\ z^3 \end{pmatrix} \tag{122}$$

where the orthogonal matrix D is

$$D = \begin{pmatrix} D_{11} & D_{12} & D_{13} \\ D_{21} & D_{22} & D_{23} \\ D_{31} & D_{32} & D_{33} \end{pmatrix} \tag{123}$$

The vector pointing from the satellite to the sun has the following components in the reference frame fixed in the satellite:

$$z^k_{s*} = \sum_{\ell=1}^{3} D_{\ell k}\, x^{\ell}_{sb} \qquad k = 1, 2, 3 \tag{124}$$

The components of the acceleration on the satellite due to solar radiation pressure are then

$$F^k_{rp} = g^k(z^1_{s*}, z^2_{s*}, z^3_{s*}) \cdot \Lambda \qquad k = 1, 2, 3 \tag{125}$$

where the functions g^k depend on the shape and reflection properties of the satellite and on the solar flux and distance from the sun, and where

$$\Lambda = \begin{cases} 1 & \text{if satellite not in shadow} \\ 0 < \Lambda < 1 & \text{if satellite in penumbra} \\ 0 & \text{if satellite in umbra} \end{cases} \tag{126}$$

The components of this acceleration referred to the mean equinox and equator of 1950.0 are then

$$F_b^k = \sum_{\ell=1}^{3} D_{k\ell} F_*^k \tag{127}$$

This is to be added to the right side of (87) with $F_e^k = 0$. The area to mass ratio of the earth is so small that the solar radiation pressure acceleration on the earth is completely ignorable.

Some of the radiation incident on a satellite is absorbed and re-emitted, some reflected specularly and some reflected diffusely. There could be multiple reflections for complicated shapes. For a specific satellite it might be possible to derive expressions for the functions g^k. Alternatively, unknown parameters in some model for the functions g^k could be determined simultaneously with the satellite orbital initial conditions in fitting to data. We shall now consider possible models for use with this second technique and employ vector notation rather than the transformation matrix D.

Mariner spacecraft (interplanetary probes and Mars orbiter) are sun and earth oriented for most efficient use of their solar panels and communications antenna. For such spacecraft we define the unit vectors

$$\hat{r}_{bs} = \frac{\vec{r}_{bs}}{|\vec{r}_{bs}|}$$

$$\hat{N} = \frac{\vec{r}_{bs} \times \vec{r}_{be}}{|\vec{r}_{bs} \times \vec{r}_{be}|} \tag{128}$$

$$\hat{T} = \hat{N} \times \hat{r}_{bs}$$

These unit vectors coincide with axes fixed in the spacecraft and the components of the solar radiation pressure acceleration along these axes depend only on the distance from the sun. Namely, we can write

$$\vec{F}_b = \left[\frac{c_1}{r_{bs}^2}\hat{r}_{bs} + \frac{c_2}{r_{bs}^2}\hat{T} + \frac{c_3}{r_{bs}^2}\hat{N}\right] \cdot \Lambda \tag{129}$$

where c_1, c_2, c_3 are constants to be determined by fitting to data.

For an earth satellite let us define the unit vectors

$$\left.\begin{aligned} \vec{E}_3 &= -\frac{\vec{x}_{be}}{|\vec{x}_{be}|} && \text{yaw} \\ \vec{E}_1 &= \frac{\vec{x}_{be} \times \dot{\vec{x}}_{be}}{|\vec{x}_{be} \times \dot{\vec{x}}_{be}|} && \text{pitch} \\ \vec{E}_2 &= \vec{E}_3 \times \vec{E}_1 && \text{roll} \end{aligned}\right\} \tag{130}$$

Axes fixed in the LES-8/9 satellites to be launched in 1974 coincide closely with these ideal pitch, roll and yaw axes, the attitude control system keeping the discrepancy within $\pm 0\overset{\circ}{.}1$ about pitch and roll and $\pm 0\overset{\circ}{.}6$ about yaw. In Section VII-D-3b the attitude control error is considered in deriving expressions for satellite on-board look angle measurements, but we shall ignore it in deriving expressions for the solar radiation pressure acceleration on the satellite.

The sun pitch and roll angles are given by (see Section VII-D-3b)

$$\left.\begin{aligned} \sin\alpha &= \frac{\vec{r}_{sb}\cdot\vec{E}_2}{\sqrt{(\vec{r}_{sb}\cdot\vec{E}_2)^2+(\vec{r}_{sb}\cdot\vec{E}_3)^2}} \\ \cos\alpha &= \frac{\vec{r}_{sb}\cdot\vec{E}_3}{\sqrt{(r_{sb}\cdot\vec{E}_2)^2+(\vec{r}_{sb}\cdot\vec{E}_3)^2}} \end{aligned}\right\} \quad -180° \leq \alpha < 180° \tag{131}$$

$$\sin\delta = \frac{\vec{r}_{sb}\cdot\vec{E}_1}{|\vec{r}_{sb}|} \qquad -90° \leq \delta \leq 90° \tag{132}$$

We can assume that

$$\vec{F}_b = \sum_{i=1}^{3} \frac{g_i(\alpha,\delta)}{r_{sb}^2}\,\vec{E}_i \tag{133}$$

The sun pitch angle α varies by $360°$ during an orbital revolution. The sun roll angle δ varies by $\pm$ the inclination of the satellite orbit to the ecliptic during a year, but δ is essentially constant for a few orbital revolutions. Thus for orbit fits spanning a few days we can assume that the g_i are functions of α only. We might write

$$g_i = c_{io} + \sum_{j=1}^{n} (c_{ij}\cos j\,\alpha + s_{ij}\sin j\,\alpha) \qquad i = 1, 2, 3 \tag{134}$$

with coefficients c_{ij}, s_{ij} to be determined by fitting to data. We can avoid evaluating trigonometric functions by calculating the $\cos j\,\alpha$ and $\sin j\,\alpha$ from equations (131) and (93).

For orbit fits over a period of time during which δ changes appreciably, we might assume that the coefficients in (134) are given by

$$\left.\begin{aligned} c_{ij} &= \sum_{k=0}^{m} c_{ijk}(\sin\delta)^k \\ s_{ij} &= \sum_{k=0}^{m} s_{ijk}(\sin\delta)^k \end{aligned}\right\} \quad \begin{aligned} i &= 1, 2, 3 \\ j &= 0, 1, \ldots, n \end{aligned} \tag{135}$$

with coefficients c_{ijk}, s_{ijk} to be determined by fitting to data. We use $\sin\delta$ rather than δ in the parametrization (135) to avoid evaluating inverse trigonomic functions.

The LES-6 satellite launched in 1968 is a symmetrical cylinder spinning about the pitch axis, so we could assume that $g_i = c_{io}$ in (134) with no dependence on α. For non-earth oriented satellites, parametrizations other than (133) and (134) would have to be devised.

Given the radius of the sun ρ_s and of the earth ρ_e and the coordinates $\vec{x}_{es}$ and $\vec{x}_{be}$ of the earth relative to the sun and the satellite relative to the earth, we shall now determine that fraction Λ of the sun's disk which is not blocked by the earth from illuminating the satellite. Referring to Fig. 1, let $\vec{x}_{bs} = \vec{x}_{be} - \vec{x}_{es}$. If $|\vec{x}_{bs}| < |\vec{x}_{se}|$ we have $\Lambda = 1$. Otherwise, we first adjust $\vec{x}_{be}$ to account for the movement of the earth since the light past it:

$$\vec{y}_{be} = \vec{x}_{be} + \dot{\vec{x}}_{es}\,\tau \tag{136}$$

where (see Fig. 2)

$$\tau = \frac{1}{c}\,\vec{x}_{be} \cdot \frac{\vec{x}_{bs}}{|\vec{x}_{bs}|} \tag{137}$$

is the time required for light to travel past the earth to the satellite along $\vec{x}_{bs}$ (c = velocity of light in same units as $\dot{\vec{x}}_{es}$). Let R be the length

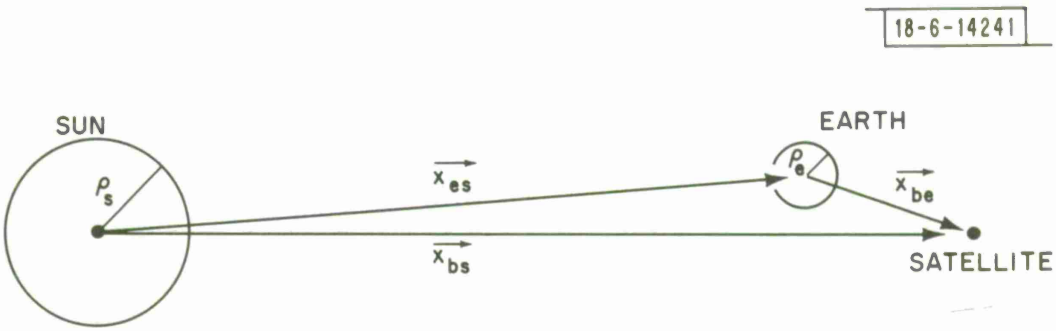

Fig. 1. Position vectors for shadow calculations.

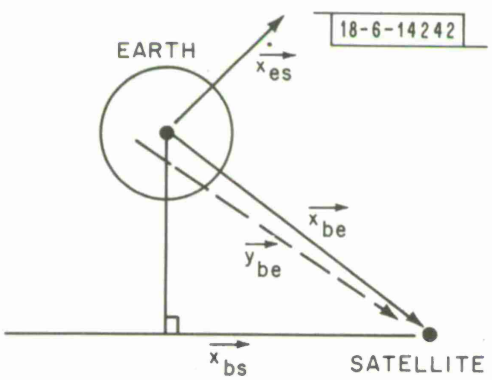

Fig. 2. Correction of satellite-earth position vector for light time.

of the projection of $\vec{y}_{be}$ onto $\vec{x}_{bs}$:

$$R = \frac{\vec{y}_{be} \cdot \vec{x}_{bs}}{|\vec{x}_{bs}|} \tag{138}$$

Let d be the closest approach of the vector $\vec{x}_{bs}$ to the center of the earth:

$$d = \left| \vec{x}_{be} - R \frac{\vec{x}_{bs}}{|\vec{x}_{bs}|} \right| \tag{139}$$

The angular radius of the sun is

$$r_s = \frac{\rho_s}{|\vec{x}_{bs}|} \tag{140}$$

Implicit in what we do in the following is that r_s is small ($\approx .0087$ for earth satellites). If

$$d \geq \rho_e + Rr_s \tag{141}$$

we have $\Lambda = 1$. Otherwise the disks of the sun and earth intersect as seen from the satellite. The tangent of the angular radius of the earth as seen from the satellite is then very close to the value

$$r_e = \frac{\rho_e}{R} \tag{142}$$

The tangent of the angle between $\vec{x}_{bs}$ and $\vec{y}_{be}$ is

$$s = \frac{|\vec{x}_{bs} \times \vec{y}_{be}|}{\vec{x}_{bs} \cdot \vec{y}_{be}}$$

$$= \frac{|\vec{x}_{bs} \times \vec{y}_{be}|}{R\,|\vec{x}_{bs}|} = \frac{d}{R} \tag{143}$$

Let

$$r_1 = \min(r_s, r_e)$$
$$r_2 = \max(r_s, r_e) \tag{144}$$

Referring to Fig. 3 we have

$$\theta = \cos^{-1}\left(\frac{r_2^{\,2} + s^2 - r_1^{\,2}}{2r_2 s}\right)$$
$$h = r_2 \sin\theta$$
$$\phi' = \sin^{-1}\left(\frac{h}{r_1}\right) \tag{145}$$
$$\phi = \pi - \phi'$$

The areas of the sectors in Fig. 4 are

$$A_1 = \phi\, r_1^{\,2}$$
$$A_2 = sh \tag{146}$$
$$A_3 = \theta\, r_2^{\,2}$$

The non-intersecting area A of the smaller disk is

$$A = A_1 + A_2 - A_3 \tag{147}$$

If $r_1 = r_s$, the proportion of illumination is

$$\Lambda = \frac{A}{\pi r_s^{\,2}} \tag{148}$$

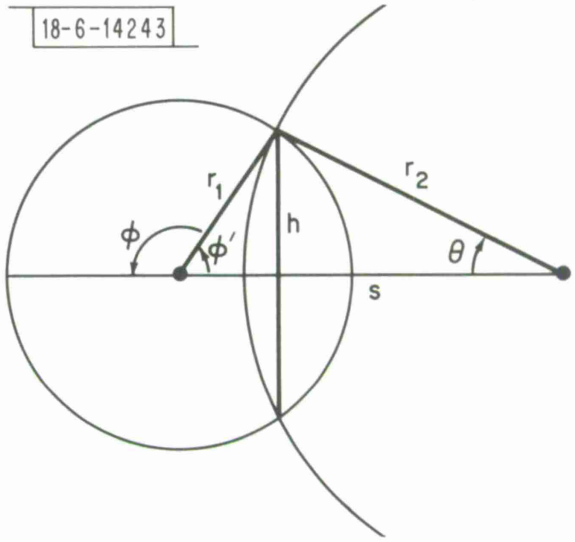

Fig. 3. Sun and earth disks as seen from the satellite.

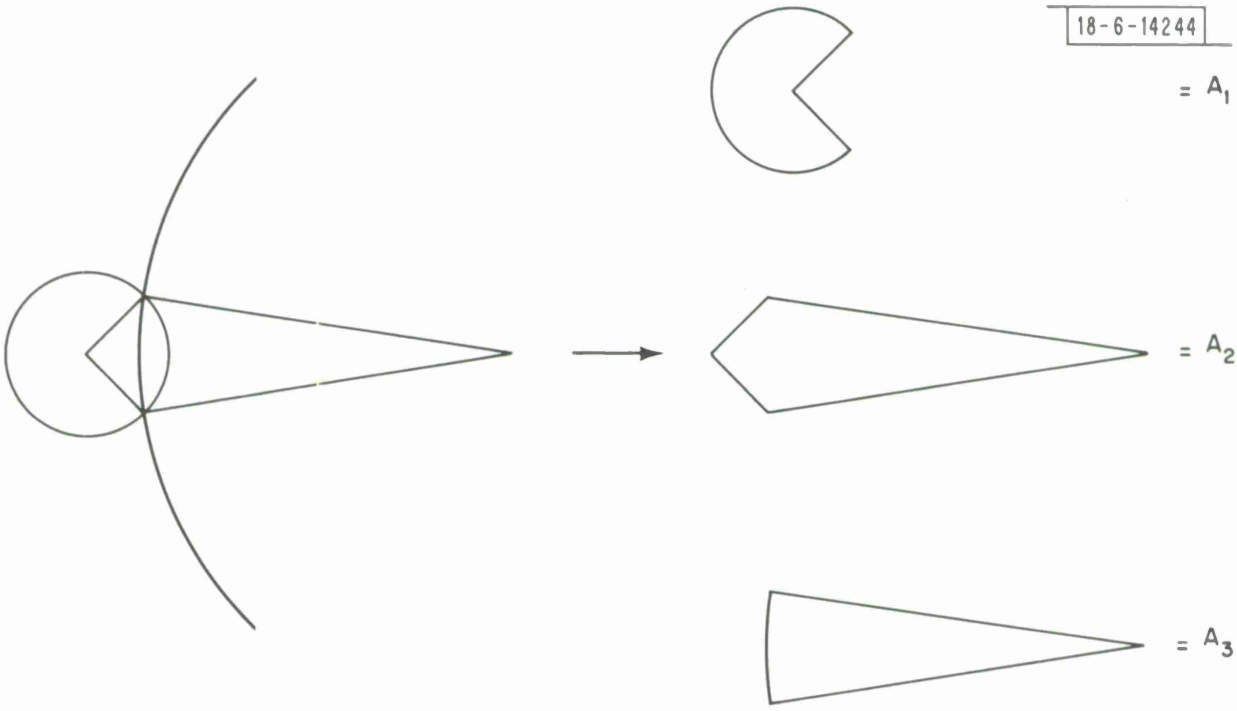

Fig. 4. Determination of the fraction of the sun's disk blocked by the earth.

If $r_1 = r_e$,

$$\Lambda = \frac{\pi r_s^2 + A - \pi r_s^2}{\pi r_s^2} \tag{149}$$

Condition (141) of non-intersection is equivalent to

$$r_1 + r_2 \leq s \Rightarrow \Lambda = 1 \tag{150}$$

If one disc lies within the other we modify (149) and (150) as follows

$$r_2 - r_1 \geq s \Rightarrow \begin{cases} \Lambda = 0 & \text{if } r_1 = r_s \\ \Lambda = \dfrac{\pi r_s^2 - \pi r_e^2}{\pi r_s^2} & \text{if } r_1 = r_e \end{cases} \tag{151}$$

The above formulas for considering the effects of shadow umbra and penumbra are due to R. Reasenberg. It is important that Λ change gradually between 0 and 1 when entering and leaving shadow for reasons of numerical integration stability, besides the fact that things happen this way in nature.

V-F-2. Atmospheric Drag

At present we do not have atmospheric drag programmed in PEP for earth satellites, since the only satellites we have had occasion to deal with have been well beyond the earth's atmosphere. There exist many sophisticated models that can be used to add this effect to PEP if it becomes necessary (see Ref. 22, pp. 18-28).

We do have a simple atmospheric drag model programmed in PEP for the Mariner Mars orbiter. We assume an exponential model for the density ρ of the Martian atmosphere:

$$\rho = \rho_o e^{-\frac{r-r_o}{h}} \tag{152}$$

where r is the distance of the satellite to Mars, r_o the radius of Mars and h a scale height. Then the drag force acting on the satellite has magnitude

$$D = \frac{1}{2} \rho v^2 A C_D \tag{153}$$

where v is the velocity of the satellite relative to the atmosphere, A its effective cross-sectional area and C_D the drag coefficient based on the shape of the satellite and A (see Ref. 23, p. 207). These last vary with time as the orientation of the satellite varies relative to Mars. The atmosphere is assumed to be rotating with Mars (see Section XI-A). The force (153) is mostly along $\vec{v}$. There could be a small component of lifting force normal to $\vec{v}$.

V-F-3. Thruster Firing

Orbit fits for the Mariner spacecraft do not usually include thruster firings in their midst, because the effect of the thruster firing cannot be modeled accurately enough to yield small data residuals before and after the thruster firing. However, in some applications it is desirable to include such effects. Of interest to us are the stationkeeping thruster firings on the Lincoln Experimental Satellites LES-6, LES-8 and LES-9.

The stationkeeping logic on board the synchronous altitude LES satellites interprets the output of sensors on board the satellites to decide what earth longitude the satellite is over. Comparing this with the longitude that the satellite is supposed to be over the stationkeeping logic orders the appropriate thruster firing to correct the longitude of the satellite.

LES-6 has ammonia gas thrusters and electric arc ion thrusters. The former fire for a few minutes or seconds, whereas the latter fire for hours for the stationkeeping maneuvers. LES-8 and LES-9 have only the electric thrusters. The thrusting is along the $\pm$ roll vector $\vec{E}_2$ defined in (130). We can assume that

$$\vec{F}_b = T S \vec{E}_2 \tag{154}$$

where T is the thrust level of the thrusting system and where S is 0, positive or negative depending on the result of the stationkeeping logic. If not 0, S has a constant absolute value dependent on the units used for T so that the acceleration $\vec{F}_b$ to be added to the right side of (87) is in units of AU/Day^2. The thrust level of the thrusters does not vary. The desired effect on the satellite is obtained by controlling the duration of the thrust. The thrust actually occurs in little spurts a few seconds apart, but we assume the thrust level constant for the duration of the thrusting (minutes or hours).

PEP could be run in a stationkeeping simulation mode by putting the control logic into a subroutine which given the longitude that the satellite is over and the time would return the value of S. The control subroutine would have a memory of the past state of the satellite to be used along with the present state in deciding on the value of S. To simulate sensor errors, noise from a random number generator could be added to the longitude used by the control subroutine. The longitude is naturally available during a satellite numerical integration since it is needed for including the effect of earth gravitational potential tesseral harmonics [see (92)]. It is the effect of the second tesseral harmonic of the earth's gravitational potential which makes a stationkeeping system necessary for a synchronous satellite.

Given the actual sequence of thruster firings of an orbiting satellite, PEP could numerically integrate the equations of motion with the thruster acceleration (154) included and experimentally determine the thrust level T by fitting to data. The equations for the partial derivatives of motion with respect to T would have to be numerically integrated along with the equations of motion.

It is usually necessary to have thruster initiation and termination be a smooth process rather than a step process for reasons of numerical integration stability (see Fig. 5). Rocket thrusting would actually be this way, but for electric thrusting occurring in little spurts which we have assumed to be continuous, the smoothing of initiation and termination would be one additional ad hoc assumption. Since the thrust level involved with electric thrusting is low, the numerical integration might remain stable with step function initiation and termination of thrusting.

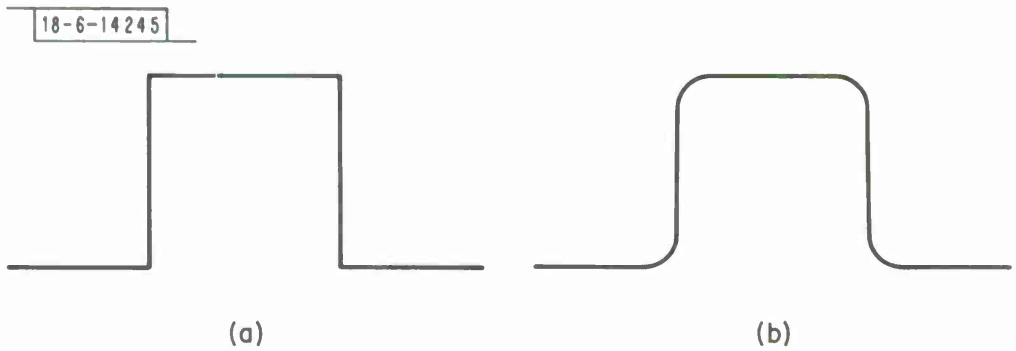

Fig. 5. Thruster initiation and termination as (a) step function and (b) smooth function.

VI. EQUATIONS FOR PARTIAL DERIVATIVES OF EARTH SATELLITE MOTION

The three second order ordinary differential equations of motion (87) can be written as six first order equations as follows:

$$\left.\begin{aligned} \frac{dx^k}{dt} &= x^{k+3} \\ \frac{dx^{k+3}}{dt} &= -\frac{(\gamma M_e)x^k}{r^3} + \left(F_b^{\,k} - F_e^{\,k}\right) \\ x^k &= x_o^{\,k}\ ,\quad x^{k+3} = x_o^{\,k+3} \quad \text{when} \quad t = t_o \end{aligned}\right\} \quad k = 1,2,3 \tag{155}$$

Let β be some time-independent parameter upon which satellite motion depends. Differentiating (155) with respect to β we obtain the variational equations

$$\left.\begin{aligned} \frac{d(\partial x^k/\partial\beta)}{dt} &= \frac{\partial x^{k+3}}{\partial\beta} \\ \frac{d(\partial x^{k+3}/\partial\beta)}{dt} &= -\frac{\partial(\gamma M_e)}{\partial\beta}\,\frac{x^k}{r^3} \\ &\quad + \frac{\gamma M_e}{r^3}\left[\frac{3x^k}{r^2}\sum_{\ell=1}^{3} x^\ell\,\frac{\partial x^\ell}{\partial\beta} - \frac{\partial x^k}{\partial\beta}\right] \\ &\quad + \frac{\partial}{\partial\beta}\left(F_b^{\,k} - F_e^{\,k}\right) \\ \frac{\partial x^k}{\partial\beta} &= \frac{\partial x_o^{\,k}}{\partial\beta}\ ,\quad \frac{\partial x^{k+3}}{\partial\beta} = \frac{\partial x_o^{\,k+3}}{\partial\beta} \quad \text{when} \quad t = t_o \end{aligned}\right\} \quad k = 1,\ 2,\ 3 \tag{156}$$

which are to be numerically integrated along with the equations of motion.

The term $\frac{\partial(\gamma M_e)}{\partial\beta}$ is zero for all parameters except for $\beta = M_e$, in which case it is γ and except for $\beta = \lambda$ [the time variation of the gravitational constant in (21)], in which case it is $\frac{M_e}{M_s}\lambda(t - t_*)$. If the mass M_b of the satellite is appreciable, we have the partial of $\gamma M_e\,(1 + \frac{M_b}{M_e})$ instead of γM_e, which has the value γM_e if $\beta = \frac{M_b}{M_e}$. We never have $\beta = \gamma$ (or γ_o) because γ (or γ_o) is set to a defined value to specify units [see equation (20)].

The initial conditions $\partial x_o^k/\partial\beta$ $(k = 1, \ldots, 6)$ of (156) are zero unless β is an initial condition of (155) or in certain other cases depending on the initial conditions chosen for (155) as explained in the next section. If equations (156) have zero initial conditions for some parameter β (such as, for example, a gravitational potential harmonic coefficient) there is some term in the right side of (156) which does not have $\partial x^k/\partial\beta$ as a factor, so that the value of $\partial x^k/\partial\beta$ is driven away from zero as the numerical integration proceeds away from the initial time t_o.

VI-A. Initial Conditions

The equations (156) for the partial derivatives of motion with respect to $\beta = x_o^j$ have as initial conditions

$$\frac{\partial x^k}{\partial x_o^j} = \delta_j^k = \begin{cases} 0 & k \neq j \\ 1 & k = j \end{cases} \qquad j,k = 1,\ldots,6 \tag{157}$$

However, specification of the initial position and velocity of (155) by $(x_o^1, \ldots, x_o^6)$ raises numerical problems when solving the normal equations for data spanning many orbits, because all the partial derivatives $\partial x^k/\partial x_o^j$ grow with time.

Consider the system of equations

$$\left.\begin{aligned} \frac{dy^k}{dt} &= y^{k+3} \\ \frac{dy^{k+3}}{dt} &= -\frac{\mu y^k}{\rho^3} \\ y^k = x_o^{\,k}\,,\quad y^{k+3} &= x_o^{\,k+3} \quad \text{when} \quad t = t_o \end{aligned}\right\} \tag{158}$$

$$\begin{aligned} \rho &= \left[\sum_{\ell=1}^{3} (y^\ell)^2\right]^{1/2} \\ \mu &= \gamma M_e \\ \left[\text{or } \mu = \gamma M_e\left(1 + \frac{M_b}{M_e}\right) \text{ if } M_b \text{ is appreciable}\right] \end{aligned} \tag{159}$$

The motion satisfying these equations follows an elliptic trajectory which coincides in position and velocity with the satellite orbit at the initial time t_o. This is the elliptic orbit osculating to the true orbit of the satellite at the initial time. There is a one-to-one correspondence between $(x_o^{\,1}, \ldots, x_o^{\,6})$ and the elliptic elements of this osculating orbit:

$$\begin{aligned} \beta_o^{\,1} &= a = \text{semi-major axis} \\ \beta_o^{\,2} &= e = \text{eccentricity} \\ \beta_o^{\,3} &= I = \text{inclination} \\ \beta_o^{\,4} &= \Omega = \text{right ascension of ascending node} \\ \beta_o^{\,5} &= \omega = \text{argument of perigee} \\ \beta_o^{\,6} &= M_o = \text{initial mean anomaly} \end{aligned} \tag{160}$$

Formulas for $\dfrac{\partial x_o^{\,k}}{\partial \beta_o^{\,j}} = \left.\dfrac{\partial y^k}{\partial \beta_o^{\,j}}\right|_{t=t_o}$ are given in Ref. 1, Chapter II. Using these quantities as initial conditions in the numerical integration of equations (156) will generate the $\partial x^k/\partial \beta_o^{\,j}$ as functions of time. $\partial x^k/\partial \beta_o^{\,1}$ grows with time, but the $\partial x^k/\partial \beta_o^{\,j}$ for $j = 2, \ldots, 6$ stay bounded, which makes fitting over many orbits more tractable.

Over a few orbits it is possible to use the formulas for $\partial y^k/\partial \beta_o^{\,j}$ given in Ref. 1, Chapter II, as approximations to $\partial x^k/\partial \beta_o^{\,j}$, thus saving the computer time required for the numerical integration of the variational equations. This approximation is valid for a longer time for planetary orbits than it is for earth satellite orbits, which, in comparison with planetary orbits, are highly perturbed.

If we use $(\beta_o^{\,1}, \ldots, \beta_o^{\,6})$ as initial conditions for (155) to be solved for instead of $(x_o^{\,1}, \ldots, x_o^{\,6})$, then the initial conditions of (156) for $\beta = M_e$ or $\beta = M_b$ are no longer zero, since the constant $\mu = \gamma M_e\left(1 + \dfrac{M_b}{M_e}\right)$ used in defining the initial osculating elliptic orbital elements $(\beta_o^{\,1}, \ldots, \beta_o^{\,6})$ changes if M_e or M_b changes. Using the elliptic orbit formulas of Ref. 1, Chapter II, some simple calculations give

$$\left.\begin{aligned} \frac{\partial x_o^{\,k}}{\partial M_e} &= 0 \\ \frac{\partial x_o^{\,k+3}}{\partial M_e} &= \frac{na^2}{2\rho M_e}\left(b_{k2}\sqrt{1-e^2}\,\cos u - b_{k1}\sin u\right) \end{aligned}\right\} \quad k = 1, 2, 3 \tag{161}$$

$$\left.\begin{aligned} \frac{\partial x_o^{\,k}}{\partial (M_b/M_e)} &= 0 \\ \frac{\partial x_o^{\,k+3}}{\partial (M_b/M_e)} &= \frac{na^2}{2\rho\left(1 + \dfrac{M_b}{M_e}\right)}\left(b_{k2}\sqrt{1-e^2}\,\cos u - b_{k1}\sin u\right) \end{aligned}\right\} \quad k = 1,2,3 \tag{162}$$

where $n = \mu^{1/2} a^{-3/2}$ is the mean motion, u the eccentric anomaly at time t_o and (b_{kj}) a transformation matrix defined in Ref. 1, Chapter II. We would probably never integrate the equations for the partial derivatives of earth satellite motion with respect to M_e or M_b/M_e. We wrote down these equations to document (i) the case of a Mars orbiter where we need the partial derivative of the orbiter motion with respect to the central body mass, and (ii) the case of a planet where we need the partial derivative of the planet motion with respect to its own mass.

If instead of defining $(\beta_o^4, \beta_o^5, \beta_o^6)$ as (Ω, ω, M_o) we defined

$$\left.\begin{aligned} \beta_o^4 &= \Omega \\ \beta_o^5 &= \tilde{\omega} = \Omega + \omega \\ \beta_o^6 &= \tilde{M}_o = \Omega + \omega + M_o \end{aligned}\right\} \tag{163}$$

we would have as initial conditions of (156)

$$\left.\begin{aligned} \frac{\partial x_o^k}{\partial \beta_o^4} &= \frac{\partial x_o^k}{\partial \Omega} - \frac{\partial x_o^k}{\partial \omega} \\ \frac{\partial x_o^k}{\partial \beta_o^5} &= \frac{\partial x_o^k}{\partial \omega} - \frac{\partial x_o^k}{\partial M_o} \\ \frac{\partial x_o^k}{\partial \beta_o^6} &= \frac{\partial x_o^k}{\partial M_o} \end{aligned}\right\} \quad k = 1, \ldots, 6 \tag{164}$$

We obtained (164) by expressing (Ω, ω, M_o) in terms of $(\beta_o^4, \beta_o^5, \beta_o^6)$, calculating $\partial\Omega/\partial\beta_o^j$, $\partial\omega/\partial\beta_o^j$, $\partial M_o/\partial\beta_o^j (j = 4, 5, 6)$, and applying the chain rule. The set of initial conditions $(a, e, I, \Omega, \tilde{\omega}, \tilde{M}_o)$ might have smaller correlations than the set $(a, e, I, \Omega, \omega, M_o)$ when fitting to certain types of data.

The partial derivative matrix $\left[\partial x_o^k/\partial \beta_o^j\right]$ $(j, k = 1, \ldots, 6)$ is singular for osculating elliptic orbital elements $(\beta_o^1, \ldots, \beta_o^6)$ when $\beta_o^2 = e = 0$ or $\beta_o^3 = I = 0$. It is unlikely that we would exactly have $e = 0$ and $I = 0$, but to alleviate this problem and still retain the desirable property that only the partials with respect to β_o^1 grow with time we could use the following set of initial conditions at time t_o:

$\beta_o^1 = r_o$ = distance of satellite from center of earth

$\beta_o^2 = \alpha$ = geocentric right ascension of satellite measured counterclockwise in right hand coordinate system when looking down from the north $(0° \leq \alpha < 360°)$

$\beta_o^3 = \delta$ = geocentric declination of satellite $(-90° \leq \delta < 90°)$

$\beta_o^4 = v_*$ = magnitude of velocity vector $\vec{v}_o$ of satellite minus the magnitude of the circular orbit velocity at radius r_o in a $-\mu/r$ gravitational potential

$\beta_o^5 = A$ = azimuth of the velocity vector $\vec{v}_o$ measured positive clockwise from the projection of the vector $\vec{e}_3$ pointing to the north on the plane normal to the position vector $\vec{r}_o$ to the projection of $\vec{v}_o$ on this plane $(0° \leq A < 360°)$

$\beta_o^6 = \beta$ = flight path angle measured positive downward from $\vec{r}_o$ to $\vec{v}_o$ $(0° < \beta < 180°)$

We obtained the idea of using these initial conditions from Ref. 24, p. 7-4. The partial derivative matrix is singular when $\delta = \pm 90^o$ (just two position points unlikely to occur at an initial epoch) and when $\beta = 0^o, 180^o$ (representing straight line motion straight out from the center of the earth also unlikely to occur).

Let us define

$$\vec{e}_n = \frac{\vec{r}_o}{|\vec{r}_o|}$$

$$\vec{e}_p = \vec{e}_3 - (\vec{e}_3 \cdot \vec{e}_n)\,\vec{e}_n \tag{165}$$

$$\vec{v}_p = \vec{v}_o - (\vec{v}_o \cdot \vec{e}_n)\,\vec{e}_n$$

so that $\vec{e}_p$, $\vec{v}_p$ are the projections of $\vec{e}_3$, $\vec{v}_o$ onto the plane normal to $\vec{e}_n$. We then have

$$r_o = |\vec{r}_o| = \left[\sum_{\ell=1}^{3} (x_o^{\ell})^2\right]^{1/2}$$

$$\begin{cases} \sin\alpha = \dfrac{x_o^2}{\left[(x_o^1)^2 + (x_o^2)^2\right]^{1/2}} \\[2ex] \cos\alpha = \dfrac{x_o^1}{\left[(x_o^1)^2 + (x_o^2)^2\right]^{1/2}} \end{cases}$$

$$\delta = \sin^{-1}\left(\frac{x_o^2}{x_o^1}\right)$$

$$v_o = |\vec{v}_o| = \left[\sum_{\ell=4}^{6} (x_o^{\ell})^2\right]^{1/2}$$

$$v_* = v_o - \sqrt{\frac{\mu}{r_o}}$$

$$
\begin{cases}
\sin A = \dfrac{(\vec{v}_p \times \vec{e}_p) \cdot \vec{e}_n}{|\vec{v}_p| \; |\vec{e}_p|} \\[2ex]
\cos A = \dfrac{\vec{v}_p \cdot \vec{e}_p}{|\vec{v}_p| \; |\vec{e}_p|}
\end{cases}
$$

$$
\beta = \cos^{-1}\left(\frac{\vec{r}_o \cdot \vec{v}_o}{|\vec{r}_o| \; |\vec{v}_o|}\right) \tag{166}
$$

Conversely, we have

$$
\begin{aligned}
x_o^{\,1} &= r_o \cos\alpha \cos\delta \\
x_o^{\,2} &= r_o \sin\alpha \cos\delta \\
x_o^{\,3} &= r_o \sin\delta \\
x_o^{\,4} &= v_o \Big[\cos\beta \cos\alpha \cos\delta - \sin\beta \big(\cos A \cos\alpha \sin\delta \\
&\qquad + \sin A \sin\alpha\big)\Big] \\
x_o^{\,5} &= v_o \Big[\cos\beta \sin\alpha \cos\delta - \sin\beta \big(\cos A \sin\alpha \sin\delta \\
&\qquad - \sin A \cos\alpha\big)\Big] \\
x_o^{\,6} &= v_o \Big[\cos\beta \sin\delta + \sin\beta \cos A \cos\delta\Big]
\end{aligned} \tag{167}
$$

In deriving the last 3 equations above we used the following relationships:

$$\vec{v}_o = \vec{v}_p + (\vec{v}_o \cdot \vec{e}_n)\,\vec{e}_n$$

$$= \vec{v}_p + v_o \cos\beta\,\vec{e}_n$$

$$|\vec{v}_p| = v_o \sin\beta$$

$$\vec{v}_p = |\vec{v}_p| \left(\cos A \frac{\vec{e}_p}{|\vec{e}_p|} + \sin A \frac{\vec{e}_p}{|\vec{e}_p|} \times \vec{e}_n\right)$$

$$\vec{e}_n = \frac{x_o^{\,1}}{r_o}\vec{e}_1 + \frac{x_o^{\,2}}{r_o}\vec{e}_2 + \frac{x_o^{\,3}}{r_o}\vec{e}_3$$

$$\vec{e}_p = \vec{e}_3 - (\vec{e}_3 \cdot \vec{e}_n)\,\vec{e}_n$$

Differentiating (167) we see that the initial conditions of (156) for this choice of initial conditions of (155) are

$$\left.\begin{aligned} \frac{\partial x_o^{\,k}}{\partial r_o} &= \frac{x_o^{\,k}}{r_o} \\ \frac{\partial x_o^{\,k+3}}{\partial r_o} &= -\frac{\mu^{1/2}}{2r_o^{\,3/2}}\,\frac{x_o^{\,k+3}}{v_o} \end{aligned}\right\} \quad k = 1, 2, 3 \tag{168}$$

$$\left.\begin{aligned} \frac{\partial x_o^{\,1}}{\partial \alpha} &= -x_o^{\,2} & \frac{\partial x_o^{\,4}}{\partial \alpha} &= -x_o^{\,5} \\ \frac{\partial x_o^{\,2}}{\partial \alpha} &= x_o^{\,1} & \frac{\partial x_o^{\,5}}{\partial \alpha} &= x_o^{\,4} \\ \frac{\partial x_o^{\,3}}{\partial \alpha} &= 0 & \frac{\partial x_o^{\,6}}{\partial \alpha} &= 0 \end{aligned}\right\} \tag{169}$$

$$\left.\begin{aligned}
\frac{\partial x_o^{\,1}}{\partial \delta} &= -r_o \cos\alpha \sin\delta \\
\frac{\partial x_o^{\,2}}{\partial \delta} &= -r_o \sin\alpha \sin\delta \\
\frac{\partial x_o^{\,3}}{\partial \delta} &= r_o \cos\delta \\
\frac{\partial x_o^{\,4}}{\partial \delta} &= v_o \left[-\cos\beta \cos\alpha \sin\delta - \sin\beta \cos A \cos\alpha \cos\delta \right] \\
\frac{\partial x_o^{\,5}}{\partial \delta} &= v_o \left[-\cos\beta \sin\alpha \sin\delta - \sin\beta \cos A \sin\alpha \cos\delta \right] \\
\frac{\partial x_o^{\,6}}{\partial \delta} &= v_o \left[\cos\beta \cos\delta - \sin\beta \cos A \sin\delta \right]
\end{aligned}\right\} \tag{170}$$

$$\frac{\partial x_o^{\,k}}{\partial v_*} = 0 \,, \quad \frac{\partial x_o^{\,k}}{\partial A} = 0 \,, \quad \frac{\partial x_o^{\,k}}{\partial \beta} = 0 \qquad k = 1, 2, 3 \tag{171}$$

$$\frac{\partial x_o^{\,k+3}}{\partial v_*} = \frac{x_o^{\,k+3}}{v_o} \qquad k = 1, 2, 3 \tag{172}$$

$$\left.\begin{aligned}
\frac{\partial x_o^{\,4}}{\partial A} &= v_o \sin\beta\,(\sin A \cos\alpha \sin\delta - \cos A \sin\alpha) \\
\frac{\partial x_o^{\,5}}{\partial A} &= v_o \sin\beta\,(\sin A \sin\alpha \sin\delta + \cos A \cos\alpha) \\
\frac{\partial x_o^{\,6}}{\partial A} &= - v_o \sin\beta \sin A \cos\delta
\end{aligned}\right\} \qquad (173)$$

$$\left.\begin{aligned}
\frac{\partial x_o^{\,4}}{\partial \beta} &= - v_o \Big[\sin\beta \cos\alpha \cos\delta + \cos\beta\,(\cos A \cos\alpha \sin\delta \\
&\qquad + \sin A \sin\alpha)\Big] \\
\frac{\partial x_o^{\,5}}{\partial \beta} &= -v_o \Big[\sin\beta \sin\alpha \cos\delta + \cos\beta\,(\cos A \sin\alpha \sin\delta \\
&\qquad - \sin A \cos\alpha)\Big] \\
\frac{\partial x_o^{\,6}}{\partial \beta} &= v_o \Big[\cos\beta \cos A \cos\delta - \sin\beta \sin\delta\Big]
\end{aligned}\right\} \qquad (174)$$

VI-B. <u>Partial Derivatives of Sun, Moon, Planet Terms</u>

Differentiating (88) with respect to β we obtain

$$\begin{aligned}
\frac{\partial \Psi^k}{\partial \beta} &= \gamma \sum_{\alpha=m,s,p} \frac{\partial M_\alpha}{\partial \beta} \left[\frac{x^k_{\alpha b}}{r^3_{\alpha b}} - \frac{x^k_{\alpha e}}{r^3_{\alpha e}}\right] \\
&\quad + \gamma \sum_{\alpha=m,s,p} \frac{M_\alpha}{r^3_{\alpha b}} \left[\frac{3x^k_{\alpha b}}{r^3_{\alpha b}} \sum_{\ell=1}^{3} x^\ell_{\alpha b} \frac{\partial x^\ell}{\partial \beta} - \frac{\partial x^k}{\partial \beta}\right] \qquad k = 1, 2, 3
\end{aligned} \qquad (175)$$

since we are assuming that the $x^k_{\alpha e}$ are fixed functions of time so that

$$\left.\begin{aligned} \frac{\partial x^k_{\alpha e}}{\partial \beta} &= 0 \\ \frac{\partial x^k_{\alpha e}}{\partial \beta} &= \frac{\partial}{\partial \beta}\left(x^k_{\alpha e} - x^k\right) = -\frac{\partial x^k}{\partial \beta} \end{aligned}\right\} \quad k = 1, 2, 3 \tag{176}$$

VI-C. Partial Derivatives of Earth Gravitational Potential Harmonics

Differentiating (103) with respect to β we obtain

$$\begin{aligned} \frac{\partial H_e^{\,k}}{\partial \beta} &= \frac{1}{\gamma M_e} H_e^{\,k} \frac{\partial(\partial M_e)}{\partial \beta} \\ &+ \gamma M_e \sum_{n=2}^{\infty} \frac{\partial J_n}{\partial \beta} \frac{1}{r^{n+2}} \left[\frac{(n+1)x^k}{r} P_n(\sin\phi) - P'_n(\sin\phi) r \frac{\partial \sin\phi}{\partial x^k}\right] \\ &+ \gamma M_e \sum_{n=2}^{\infty} \sum_{h=1}^{n} \frac{1}{r^{n+2}} \left\{\left[\frac{\partial \bar{C}_{nh}}{\partial \beta} \cos h\,\theta + \frac{\partial \bar{S}_{nh}}{\partial \beta} \sin h\,\theta\right]\right. \\ &\cdot \left[\frac{-(n+1)x^k}{r} \bar{P}_{nh}(\sin\phi) + \bar{P}'_{nh}(\sin\phi)\, r \frac{\partial \sin\phi}{\partial x^k}\right] \\ &\left. + h\left[-\frac{\partial \bar{C}_{nh}}{\partial \beta} \sin h\,\theta + \frac{\partial \bar{S}_{nh}}{\partial \beta} \cos h\,\theta\right] \cdot \bar{P}_{nh}(\sin\phi)\, r \frac{\partial \theta}{\partial x^k}\right\} \\ &+ \gamma M_e \sum_{n=2}^{\infty} \frac{J_n}{r^{n+2}} \left\{-\frac{n+2}{r^2} \sum_{\ell=1}^{3} x^\ell \frac{\partial x^\ell}{\partial \beta} \left[\frac{(n+1)\,x^k}{r} P_n(\sin\phi)\right.\right. \\ &\left. - P'_n(\sin\phi)\, r \frac{\partial \sin\phi}{\partial x^k}\right] + \frac{(n+1)}{r} \frac{\partial x^k}{\partial \beta} P_n(\sin\phi) \end{aligned}$$

$$- \frac{(n+1)x^k}{r^3} \sum_{\ell=1}^{3} x^\ell \frac{\partial x^\ell}{\partial \beta} P_n(\sin\phi) + \frac{(n+1)x^k}{r} P_n'(\sin\phi) \frac{\partial \sin\phi}{\partial \beta}$$

$$- P_n''(\sin\phi)\, r \frac{\partial \sin\phi}{\partial x^k} \frac{\partial \sin\phi}{\partial \beta}$$

$$- P_n'(\sin\phi) \frac{\partial \sin\phi}{\partial x^k} \frac{1}{r} \sum_{\ell=1}^{3} x^\ell \frac{\partial x^\ell}{\partial \beta} - P_n'(\sin\phi)\, r \frac{\partial^2 \sin\phi}{\partial x^k \partial \beta} \Bigg\}$$

$$+ \gamma M_e \sum_{n=2}^{\infty} \sum_{h=1}^{n} \frac{1}{r^{n+2}} \Bigg\{ - \frac{n+2}{r^2} \sum_{\ell=1}^{3} x^\ell \frac{\partial x^\ell}{\partial \beta}$$

$$\cdot \Bigg\{ \Big[\bar{C}_{nh} \cos h\,\theta + \bar{S}_{nh} \sin h\,\theta \Big] \cdot \Big[- \frac{(n+1)x^k}{r} \bar{P}_{nh}(\sin\phi)$$

$$+ \bar{P}_{nh}'(\sin\phi)\, r \frac{\partial \sin\phi}{\partial x^k} \Big] + h \Big[- \bar{C}_{nh} \sin h\,\theta + \bar{S}_{nh} \cos h\,\theta \Big]$$

$$\cdot \bar{P}_{nh}(\sin\phi)\, r \frac{\partial \theta}{\partial x^k} \Bigg\} + h \Big[- \bar{C}_{nh} \sin h\,\theta + \bar{S}_{nh} \cos h\,\theta \Big] \frac{\partial \theta}{\partial \beta}$$

$$\cdot \Big[- \frac{(n+1)x^k}{r} \bar{P}_{nh}(\sin\phi) + \bar{P}_{nh}'(\sin\phi)\, r \frac{\partial \sin\phi}{\partial x^k} \Big]$$

$$+ \Big[\bar{C}_{nh} \cos h\,\theta + \bar{S}_{nh} \sin h\,\theta \Big] \cdot \Bigg[\frac{(n+1)x^k}{r^3} \sum_{\ell=1}^{3} x^\ell \frac{\partial x^\ell}{\partial \beta} \bar{P}_{nh}(\sin\phi)$$

$$- \frac{n+1}{r} \frac{\partial x^k}{\partial \beta} \bar{P}_{nh}(\sin\phi) - \frac{(n+1)x^k}{r} \bar{P}_{nh}'(\sin\phi) \frac{\partial \sin\phi}{\partial \beta}$$

$$+ \bar{P}_{nh}''(\sin\phi)\, r \frac{\partial \sin\phi}{\partial x^k} \frac{\partial \sin\phi}{\partial \beta} + \bar{P}_{nh}'(\sin\phi) \Bigg(r \frac{\partial \sin\phi}{\partial x^k \partial \beta}$$

$$+ \frac{\partial \sin\phi}{\partial x^k} \frac{1}{r} \sum_{\ell=1}^{3} x^\ell \frac{\partial x^\ell}{\partial \beta} \Bigg) \Bigg]$$

$$- h^2\left[\bar{C}_{nh} \cos h\,\theta + \bar{S}_{nh} \sin h\,\theta\right]\bar{P}_{nh}(\sin\phi)\, r \frac{\partial\theta}{\partial x^k}\frac{\partial\theta}{\partial\beta}$$

$$+ h\left[- \bar{C}_{nh} \sin h\,\theta + \bar{S}_{nh} \cos h\,\theta\right]\left[\bar{P}'_{nh}(\sin\phi)\, r \frac{\partial\theta}{\partial x^k}\frac{\partial \sin\phi}{\partial\beta}\right.$$

$$\left.\left. + \bar{P}_{nh}(\sin\phi)\left(r \frac{\partial^2\theta}{\partial x^k\,\partial\beta} + \frac{1}{r}\frac{\partial\theta}{\partial x^k}\sum_{\ell=1}^{3} x^\ell \frac{\partial x^\ell}{\partial\beta}\right)\right]\right\} \tag{177}$$

where by (91), (92), (104) and (105)

$$r \frac{\partial \sin\phi}{\partial\beta} = \sum_{\ell=1}^{3}\left(A_{3\ell} - \frac{x^\ell}{r}\sin\phi\right)\frac{\partial x^\ell}{\partial\beta} + \sum_{\ell=1}^{3}\frac{\partial A_{3\ell}}{\partial\beta}x^\ell \tag{178}$$

$$r \frac{\partial\theta}{\partial\beta} = \frac{1}{\cos\phi}\sum_{\ell=1}^{3}\left(A_{2\ell}\cos\theta - A_{1\ell}\sin\theta\right)\frac{\partial x^\ell}{\partial\beta}$$

$$+ \frac{1}{\cos\phi}\sum_{\ell=1}^{3}\left(\frac{\partial A_{2\ell}}{\partial\beta}\cos\theta - \frac{\partial A_{1\ell}}{\partial\beta}\sin\theta\right)x^\ell \tag{179}$$

$$r \frac{\partial^2 \sin\phi}{\partial x^k\,\partial\beta} = \left[\frac{2x^k}{r^3}\sin\phi - \frac{A_{3k}}{r^2}\right]\sum_{\ell=1}^{3} x^\ell \frac{\partial x^\ell}{\partial\beta}$$

$$- \frac{1}{r}\left[\frac{\partial x^k}{\partial\beta}\sin\phi + x^k\frac{\partial \sin\phi}{\partial\beta}\right] + \frac{\partial A_{3k}}{\partial\beta} \tag{180}$$

$$r \frac{\partial^2 \theta}{\partial x^k \, \partial \beta} = - \frac{1}{r} \frac{\partial \theta}{\partial x^k} \sum_{\ell=1}^{3} x^\ell \frac{\partial x^\ell}{\partial \beta} + \frac{r \sin \phi}{\cos^2 \phi} \frac{\partial \theta}{\partial x^k} \frac{\partial \sin \phi}{\partial \beta}$$

$$- \frac{1}{\cos \phi} \left[A_{2k} \sin \theta + A_{1k} \cos \theta \right] \frac{\partial \theta}{\partial \beta}$$

$$+ \frac{1}{\cos \phi} \left[\frac{\partial A_{2k}}{\partial \beta} \cos \theta - \frac{\partial A_{1k}}{\partial \beta} \sin \theta \right] \tag{181}$$

The terms in (177) which do not involve $\partial J_n/\partial\beta$, $\partial \bar{C}_{nh}/\partial\beta$, $\partial \bar{S}_{nh}/\partial\beta$ can probably be ignored, except perhaps for low orders of n, especially for $n = 2$ and $h = 0$. The derivative of the rotation matrix of the earth central body $\partial A_{jk}/\partial\beta$ is zero unless β is a parameter involved in the motion of the earth central body about its center of mass, and even then we would probably assume that it is zero in integrating the equations for the partial derivatives of motion and only assume it non-zero in processing observations. This remark does not necessarily hold for, say, a Mars orbiter, unless we also had observations of a Mars lander which would give a better hold on the motion of Mars about its center of mass than would Mars orbiter observations.

VI-D. Partial Derivatives of Other Terms

We can in general ignore the partial derivatives of the other small forces in the equations of motion except for the parts of these partial derivatives which drive the results of integrating (156) away from zero. For example, we can take the derivative of the thrusting acceleration (154) to be

$$\frac{\partial \vec{F}_b}{\partial \beta} = \frac{\partial T}{\partial \beta} S \vec{E}_2 \tag{182}$$

and ignore the derivative of $\vec{E}_2$. We would have $\partial T/\partial\beta = 0$ unless $\beta = T$, in which case it is 1. However, there is one caveat we should make about this simplifying assumption which we discovered in checking the programming of these equations in PEP.

We checked the coding of the equations for the partial derivatives of motion as follows. Choosing nominal values for the various parameters, we numerically integrated the equations of motion and the equations for the partial derivatives of motion with respect to one of the parameters β. Then we chose a new value for β and numerically integrated the equations of motion and the equations for the partial derivatives with respect to β. If the old and new parameter values were β_o and β_1, respectively, we must have

$$\frac{x^k(t,\beta_1) - x^k(t,\beta_o)}{\beta_1 - \beta_o} = \frac{1}{2}\left[\left.\frac{\partial x^k(t,\beta)}{\partial\beta}\right|_{\beta=\beta_o} + \left.\frac{\partial x^k(t,\beta)}{\partial\beta}\right|_{\beta=\beta_1}\right]$$

$$k = 1, \ldots, 6 \qquad (183)$$

Using the average of the partial derivatives in the right side of (183) makes the formula valid to second order. This checking process was of course gone through for every parameter β.

PEP performs its numerical integrations on a 16 place machine. Suppose we make a change in a parameter value that affects the motion in the 6th place after a certain time. We do not want to make too large a change in the parameter, since we want to retain the validity of the Taylor expansion (183). On the other hand, we want to make a large enough change to get a significant check. Presuming that the numerical integration procedure loses 4 places in integrating the equations of motion we would expect to have 6 significant digits in the difference quotient in the left side of (183). But if we included all the terms in the partial derivatives in the right side of (156), we found 10 place agreement between the left and right sides of (183), which is as if no significance was lost in integrating the equations of motion. Since we know that 4 or so physically significant places were lost in integrating the equations of motion, the exact agreement between the results of simultaneously integrating the equations for motion and partials is indicative of a mathematical coupling between the two systems of equations.

On the other hand, if we made simplifying assumptions such as in (182), we sometimes found only 4 place agreement between the difference quotient and the averaged partial derivatives in (183). Actually, the partial derivatives do not have to be known with extreme accuracy in the maximum likelihood, least squares iterative determination of parameters, so we have made assumptions of the type of (182) in a number of cases. The reason for doing this is the extreme complexity of some of the partial derivative formulas. For example, see (177).

VII. OBSERVATIONS

The theoretical value of an observation is, in general, a function of the vector $\vec{r}_1$ from the receiving site at receive time t_1 to the observed body at reflection time t_* and, for radar type observations, of the vector $\vec{r}_2$ from the sending site at send time t_2 to the observed body at reflection time t_*, plus other parameters $\alpha^1, \ldots, \alpha^m$ such as measurement biases, planetary radius and shape parameters, interplanetary media and earth atmosphere and ionosphere parameters, etc. We write this functional dependence as

$$h(\vec{r}_1 , \vec{r}_2 , \alpha^1, \ldots, \alpha^m) \tag{184}$$

To define the vectors $\vec{r}_i$ in terms of coordinates we recall the definitions at the start of Section V-A and add the following definitions for $k = 1, 2, 3$

x^k_{1e} = coordinate of receiving observing site relative to center of earth

x^k_{2e} = coordinate of sending observing site relative to center of earth

x^k_{so} = coordinate of sun relative to center of mass of solar system

$$= -\left(\sum_{j=1}^{9} M_j \; x^k_{js}\right) \Big/ \left(1 + \sum_{j=1}^{9} M_j\right) \text{ where } j \text{ denotes } 1 \text{ Mercury,}$$

2 Venus, 3 earth-moon barycenter, 4 Mars, 5 Jupiter, 6 Saturn, 7 Uranus, 8 Neptune and 9 Pluto.

$x^k_{eo} = x^k_{es} + x^k_{so}$

= coordinate of earth relative to center of mass of solar system

$x^k_{po} = x^k_{ps} + x^k_{so}$

= coordinate of planet relative to center of mass of solar system.

For observations of an earth satellite b or moon m = b we have

$$\vec{r}_i = \vec{x}_{be}(t_*) - \vec{x}_{ie}(t_i) \qquad i = 1, 2 \tag{185}$$

and for observations of a planet p or sun p = s with $\vec{x}_{ss} = \vec{0}$ we have

$$\vec{r}_i = \vec{x}_{ps}(t_*) - \left[\vec{x}_{ie}(t_i) + \vec{x}_{cs}(t_i) - \frac{M_m}{M_c}\,\vec{x}_{me}(t_i)\right] \qquad i = 1, 2 \tag{186}$$

where a vector $\vec{x}$ denotes (x^1, x^2, x^3) if position only is involved in the theoretical value of the observable and $(x^1, x^2, x^3, x^4, x^5, x^6)$ if both position and velocity are involved in this theoretical value. All coordinates are referred to the mean equinox and equator of 1950.0.

The formulas for the theoretical values of observations are most easily expressed in a coordinate system with origin at the center of mass of the solar system. The numerical integration of the equations of motion generates body coordinates in this inertial frame despite the appearance of generating relative coordinates: the relative equations of motion came from the formal subtraction of equations in inertial space rather than from an actual transformation to a non-inertial system. Thus the $\vec{r}_i$ should be expressed in the coordinate system with origin at the center of mass of the solar system rather than in a system with origin at the center of mass of the earth for observations of bodies in cis-lunar space or in a system with origin at the center of mass of the sun for planetary observations. However, for most observations the theoretical calculations in PEP for light-time, etc., are done in these latter systems using the formulas valid for an inertial frame without transforming them to the non-inertial system. It is only for extremely accurate time delay and long baseline interferometer observations that the light time iterations, etc., have to be, and are, done in an inertial frame.

In the case of observations of a star p external to the solar system, the observable is a function of the vector

$$\vec{r}_1 = \vec{x}_{po} - \frac{1}{R}\left[\vec{x}_{1e}(t_1) + \vec{x}_{cs}(t_1) - \frac{M_m}{M_c}\,\vec{x}_{me}(t_1) + \vec{x}_{so}(t_1)\right] \tag{187}$$

where $\vec{x}_{po}$ is the unit vector pointing to the star from the center of mass of the solar system and R its distance from the solar system (both constant in time except for relatively small changes).

In PEP coordinates x^k_{be}, x^k_{me}, x^k_{cs}, x^k_{ps} (p = planet) referred to the mean equinox and equator of 1950.0 are determined by interpolation as functions of time from magnetic tapes generated by numerical integration. If we were observing a satellite $\vec{x}_{bp}$ of planet p, the vector $\vec{x}_{ps}(t_*)$ in (186) would be replaced by

$$\vec{x}_{ps}(t_*) + \vec{x}_{bp}(t_*) \quad . \tag{188}$$

$\vec{x}_{bp}$ could also be a vector to a spot on the surface of the planet with functional dependence on time being determined by planetary rotation (see Section XI-A). Similar remarks apply in (185) for observations of a lunar orbiter or spot on the moon $\vec{x}_{bm}$.

Angular observations involve only a receiving site x^k_{1e}, whereas radar or radio transponder observations involve both a receiving site x^k_{1e} and a sending site x^k_{2e}. Long baseline interferometer observations involve two receiving sites x^k_{1e} , x^k_{2e} . Formulas for site coordinates on the earth referred to the mean equinox and equator of 1950.0 are given in Section VII-A. We shall in addition consider satellite based observations for which x^k_{1e} , x^k_{2e} are determined by interpolation from magnetic tapes.

In PEP it is assumed that the epoch time of an observation is UTC time at reception, where UTC is disseminated by the U.S. Naval Observatory Time Service Radio station WWV or some equivalent facility (see Section III-C). There is an option in PEP of having other types of epochs UT*, but then Al-UT* must be provided for each observation rather than being generated internally in PEP as explained in Section III-C. The relation between Al atomic time and Coordinate Time is given in Section III-B.

The site coordinates x^k_{1e}, x^k_{2e} are in units of light seconds and the velocities $\dot{x}^k_{1e}$, $\dot{x}^k_{2e}$ in units of light seconds per second for observing sites on the earth. All other positions and velocities as they come from ephemeris magnetic tapes are in astronomical units and astronomical units per day. We

assume that they are multiplied by the astronomical unit in light seconds (denoted by AU) and by AU/86,400 to convert them to units of light seconds and light seconds per second before they are used in the formulas in this Section. By "second" we mean "coordinate time second".

The formulas for the theoretical values of the various observable types are first derived using classical physics or special relativity. We then give corrections to these theoretical values due to general relativity, the interplanetary media, and the earth's atmosphere and ionosphere. There are further corrections involved in transforming to the observer's reference frame for clock rates with time delay measurements and for aberration with angular measurements. There are various models programmed for measurement biases.

VII-A. Observing Site Coordinates

Let (u_i^1, u_i^2, u_i^3) be the rectangular coordinates of observing site in the right handed coordinate system fixed in the earth with origin at the center of mass of the earth defined at the start of Section IV. By (55) we have

$$x_{ie}^k = \sum_{\ell=1}^{3} A_{\ell k} u_i^{\ell} \qquad k = 1, 2, 3 \tag{189}$$

where formulas for the matrix $A = WSNPD$ are given in Section IV as functions of time ($i = 1$ receiving time, $i = 2$ sending time). There is an option in PEP of evaluating the wobble W, nutation N, precession P and error-in-precession D matrices either at both receiving and sending times or at half-way between receiving and sending times. The rotation matrix S is always evaluated at both receiving and sending times. The nutation-precession expressions are a function of coordinate time CT and the rotation of the earth is a function of universal time UT1. These times are determined from the specified time of observation as explained in Section III.

Site coordinates fixed in the earth are not usually specified as rectangular coordinates, but rather as spherical, cylindrical or spheroidal (or geodetic) coordinates.

Spherical geocentric site coordinates are

$$\rho = \text{radius from center of earth}$$

$$\theta = \text{longitude west of Greenwich} \tag{190}$$

$$\phi' = \text{north latitude}$$

We must perform the following transformation

$$u^1 = \rho \cos\theta \cos\phi'$$

$$u^2 = -\rho \sin\theta \cos\phi' \tag{191}$$

$$u^3 = \rho \sin\phi'$$

before applying (189). It is customary astronomical practice to measure longitude positive to the west, which would yield a left hand coordinate system if we did not have a minus sign in the equation in (191) for u^2. The longitude θ in (89) for use in the earth gravitational potential harmonic expansion (94) is measured positive to the east. It is just a historical accident that the longitude for site coordinates in PEP is measured positive to the west. Longitudes are actually not measured from the meridian of figure through the pole of figure (mean rotation pole of 1900-1905) and Greenwich, but as noted at the start of Section IV from the meridian of figure through the pole of figure and the point on the equator of figure which lies on the great circle through Greenwich and the mean pole of rotation of 1968.0. This is because we employ the value of A1-UT1 given by the U.S. Naval Observatory Time Service punched cards (see Table IV).

Cylindrical site coordinates are

$$\delta = \text{equatorial radius}$$

$$\theta = \text{longitude west of Greenwich} \tag{192}$$

$$z = \text{distance above equatorial } (u^1, u^2) \text{ plane}$$

We must perform the following transformation

$$\begin{aligned} u^1 &= \delta \cos \theta \\ u^2 &= -\delta \sin \theta \\ u^3 &= z \end{aligned} \tag{193}$$

before applying (189). If site coordinates are solved for in fitting to data with PEP they must be either spherical or cyclindrical coordinates. The third type of site coordinates that are input to PEP, the spheroidal or geodetic coordinates described below, cannot be adjusted when fitting to data. On input to PEP spheroidal coordinates are converted to the corresponding geocentric spherical values, and if site coordinates are to be solved for it is the spherical coordinates that are used.

The geoid or mean sea level surface of the earth is closely approximated by a spheroid of revolution with origin at the center of mass of the earth, with equatorial radius a and polar radius b, and with the same volume as the geoid. The spheroidal surface is generated by rotating the plane ellipse with semi-major axis a and semi-minor axis b about the semi-minor polar axis (mean pole of 1900-1905). We have $b = a(1 - f)$, where f is the degree of flattening. According to Ref. 15, p. 11, we have

$$\frac{1}{f} = 298.25 \pm .02$$

$$a = 6378.1575 \pm 0.0108 \text{ km} \tag{194}$$

Spheroidal site coordinates are (see Fig. 6)

$$\begin{aligned} h &= \text{height above mean sea level} \\ \theta &= \text{longitude west of Greenwich} \\ \phi &= \text{north geodetic latitude} \end{aligned} \tag{195}$$

According to Ref. 6, pp. 57-58 we have for $h << a$

$$\begin{aligned} \rho \sin \phi' &= (aS + h) \sin \phi \\ \rho \cos \phi' &= (aC + h) \cos \phi \end{aligned} \tag{196}$$

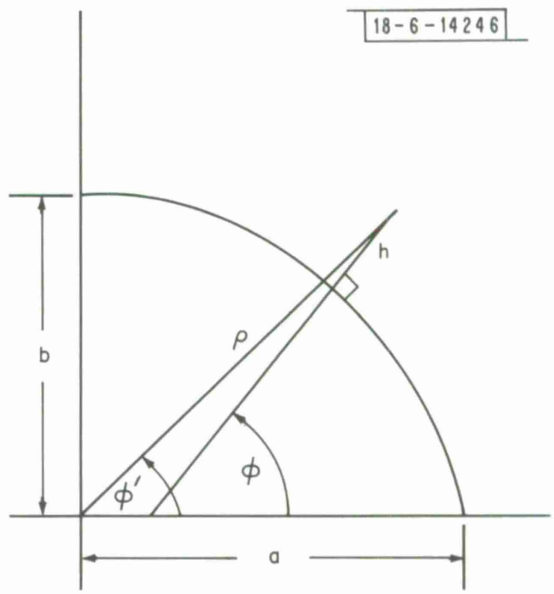

Fig. 6. Geodetic latitude ϕ and height above sea level h related to geocentric latitude ϕ' and radius ρ.

where

$$S = (1 - f)^2 C$$

$$C = \left[\cos^2 \phi + (1 - f)^2 \sin^2 \phi\right]^{-1/2} \tag{197}$$

A series expansion gives

$$S = \left(1 - \frac{3}{2} f + \frac{5}{16} f^2 + \frac{3}{32} f^3\right) - \left(\frac{1}{2} f - \frac{1}{2} f^2 - \frac{5}{64} f^3\right)\cos 2\phi$$
$$+ \left(\frac{3}{16} f^2 - \frac{3}{32} f^3\right)\cos 4\phi - \frac{5}{64} f^3 \cos 6\phi$$

$$C = \left(1 + \frac{1}{2} f + \frac{5}{16} f^2 + \frac{7}{32} f^3\right) - \left(\frac{1}{2} f + \frac{1}{2} f^2 + \frac{27}{64} f^3\right)\cos 2\phi$$
$$+ \left(\frac{3}{16} f^2 + \frac{9}{32} f^3\right)\cos 4\phi - \frac{5}{64} f^3 \cos 6\phi \tag{198}$$

These formulas can be used to derive geocentric coordinates from geodetic coordinates.

The unit normal $\vec{u}_n$ to the geoid at a given site is approximately the normal to the spheroid:

$$u_n^1 = \cos\theta \cos\phi$$
$$u_n^2 = -\sin\theta \cos\phi \tag{199}$$
$$u_n^3 = \sin\phi$$

The minus sign in the equation for u_n^2 is necessary if θ is measured positive to the west. The unit normal is needed in calculating the theoretical value of azimuth-elevation observations and in making corrections to observations due to the earth's atmosphere and ionosphere.

Given geocentric coordinates ρ, ϕ' we determine geodetic coordinates h, ϕ for calculating the unit normal as follows. We take as a first guess $h = 0$, $\phi = \phi'$ and calculate S and C by (197) or (198). Dividing the first equation of (196) by the second we have

$$\tan \phi' = \frac{aS + h}{aC + h} \tan \phi \tag{200}$$

Using the values of S, C and $h = 0$ we solve for ϕ. Then using S, C and the new value of ϕ we solve either equation in (196) for h. Using the new values of ϕ and h we repeat the process described above, continuing the iteration until we converge to the true values of h, ϕ.

Differentiating (189) with respect to t we obtain the following formula for the velocity of observing site i:

$$\frac{dx_{ie}^{k}}{dt} = \sum_{\ell=1}^{3} \frac{dA_{\ell t}}{dt} u_i^{\ell} \qquad k = 1, 2, 3 \tag{201}$$

where

$$\frac{dA}{dt} = \frac{dW}{dt} SNPD + W \frac{dS}{dt} NPD + WS \frac{dN}{dt} PD + WSN \frac{dP}{dt} D + WSNP \frac{dD}{dt} \tag{202}$$

We would almost always assume that all the above derivatives were zero except for dS/dt, so that

$$\frac{dA}{dt} = W \frac{dS}{dt} NPD \tag{203}$$

However, there is an option in PEP of using dP/dt and dN/dt.

By (64) we have

$$\frac{dS}{dt} = \begin{bmatrix} -\sin\Theta & \cos\Theta & 0 \\ -\cos\Theta & -\sin\Theta & 0 \\ 0 & 0 & 0 \end{bmatrix} \frac{d\Theta}{dt} \tag{204}$$

where by (65)

$$\frac{d\Theta}{dt} = \frac{d\Theta_o}{dt} + \frac{d}{dt}(\Delta\psi \cos \varepsilon) \tag{205}$$

The quantity $d\Theta_o/dt$ is given by (68) with t in UT1 time units. We must multiply by a factor to convert to CT time units. This factor is approximately (47), at least before 1.0 January 1972 when UTC was offset from A1 time to keep it at about the same rate as UT2. At present this factor would be about $(1 - 3 \times 10^{-8})$, and so can probably be ignored. We would ignore $d(\Delta\psi \cos \varepsilon)/dt$ in (205) unless we were using the derivatives of the nutation and precession in (202) (an infrequently used option in PEP).

By (70) the derivative of the nutation matrix is

$$\frac{dN}{dt} = \begin{bmatrix} 0 & -\frac{d(\Delta\psi \cos \varepsilon)}{dt} & -\frac{d(\Delta\psi \sin \varepsilon)}{dt} \\ \frac{d(\Delta\psi \cos \varepsilon)}{dt} & 0 & -\frac{d\Delta\varepsilon}{dt} \\ \frac{d(\Delta\psi \sin \varepsilon)}{dt} & \frac{d\Delta\varepsilon}{dt} & 0 \end{bmatrix} \tag{206}$$

where by (71)

$$\begin{aligned} \frac{d(\Delta\psi \cos \varepsilon)}{dt} &= \frac{d\Delta\psi}{dt} \cos \varepsilon - \Delta\psi \sin \varepsilon \left(\frac{d\varepsilon_o}{dt} + \frac{d\Delta\varepsilon}{dt}\right) \\ \frac{d(\Delta\psi \sin \varepsilon)}{dt} &= \frac{d\Delta\psi}{dt} \sin \varepsilon + \Delta\psi \cos \varepsilon \left(\frac{d\varepsilon_o}{dt} + \frac{d\Delta\varepsilon}{dt}\right) \end{aligned} \tag{207}$$

Differentiating (72) we have in units of radians per second

$$\begin{aligned} \frac{d\varepsilon_o}{dt} = &- 7.196712326 \times 10^{-14} - 4.96321035 \times 10^{-18} \tau_o \\ &- 6.29675115 \times 10^{-19} \tau_o^{\,2} \end{aligned} \tag{208}$$

where τ_o is measured in units of 10,000 ephemeris days from the epoch 1900 January 0.5 (J.E.D. 2415020.0). The quantities $\Delta\psi$, $\Delta\varepsilon$ are determined in PEP by Everett fourth difference interpolation from half day tabular interval tables read from magnetic tape. The quantities $d\Delta\psi/dt$, $d\Delta t/dt$ are determined by Everett fourth difference numerical differentiation (see Section IX-B-1).

The time derivative of the precession matrix P is given by (82) with derivatives with respect to h replaced by derivatives with respect to t. Differentiating (76) we have in units of radians per second

$$\begin{aligned}
\frac{d\zeta}{dt} &= 3.541125409 \times 10^{-12} + 2.540599250 \times 10^{-16}\,\tau \\
&\quad + 6.227575681 \times 10^{-18}\,\tau^2 \\
\frac{dz}{dt} &= 3.541125409 \times 10^{-12} + 9.194950266 \times 10^{-16}\,\tau \\
&\quad \pm 6.679857713 \times 10^{-18}\,\tau^2 \\
\frac{d\theta}{dt} &= 3.079166344 \times 10^{-12} - 3.583759208 \times 10^{-16}\,\tau \\
&\quad + 1.447302504 \times 10^{-17}\,\tau^2
\end{aligned} \tag{209}$$

where τ is measured in units of 10,000 ephemeris days from the epoch 1950.0 (J.E.D. 2433282.423).

We always ignore the time derivatives of the wobble W and error-in-precession D matrices.

Differentiating (201) we see that the site acceleration and jerk are

$$\left.\begin{aligned}
\frac{d^2x^k_{ie}}{dt^2} &= \sum_{\ell=1}^{3} \frac{d^2A_{\ell k}}{dt^2}\, u_i^{\ell} \\
\frac{d^3x^k_{ie}}{dt^3} &= \sum_{\ell=1}^{3} \frac{d^3A_{\ell k}}{dt^3}\, u_i^{\ell}
\end{aligned}\right\} \qquad k = 1, 2, 3 \tag{210}$$

where by (203)

$$\frac{d^2A}{dt^2} = W \frac{d^2S}{dt^2} NPD$$

$$\frac{d^3A}{dt^3} = W \frac{d^3S}{dt^3} NPD \tag{211}$$

since for the purposes that we would want the site acceleration and jerk we can ignore the derivatives of W, N, P and D . By (204) we have

$$\frac{d^2S}{dt^2} = \begin{bmatrix} -\cos\Theta & -\sin\Theta & 0 \\ \sin\Theta & -\cos\Theta & 0 \\ 0 & 0 & 0 \end{bmatrix} \left(\frac{d\Theta}{dt}\right)^2$$

$$\frac{d^3S}{dt^3} = \begin{bmatrix} \sin\Theta & -\cos\Theta & 0 \\ \cos\Theta & \sin\Theta & 0 \\ 0 & 0 & 0 \end{bmatrix} \left(\frac{d\Theta}{dt}\right)^3 \tag{212}$$

since by (68) we can ignore the second derivative of the sidereal time Θ .

VII-B. Time Delay

We wish to calculate the theoretical value of the round trip time delay, in vacuo, of a signal sent from site $\vec{x}_{2e}(t_2)$ at coordinate time t_2, reflected from (or passed through a transponder on) earth satellite $\vec{x}_{be}(t_*)$ (or planet $\vec{x}_{ps}(t_*)$) at coordinate time t_*, and received at site $\vec{x}_{1e}(t_1)$ at coordinate time t_1 as a function of the given receive time t_1. If we neglect general relativistic effects this round trip coordinate time delay $(t_1 - t_2)$ is just the distance in light seconds from the receiving site at time t_1 to the observed body at the retarded time t_* plus the distance in light seconds from the observed body at time t_* to the sending site at still further retarded time t_2.

For this simple relation between the distances and retarded times to be valid, the iterative determination of the retarded times should be performed in a coordinate system with origin at the center of mass of the solar system. However, for most observations these iterations are performed in PEP in a coordinate system with origin at the center of mass of the earth for observations of bodies in cis-lunar space or in a coordinate system with origin at the center of mass of the sun for planetary observations. It is only for very accurate observations that the light time iterations in PEP are performed in an inertial system with origin at the center of mass of the solar system. After completion of the light time iterations corrections are made for the effects of (ia) observed body radius and shape for radar bounce observations or (ib) transponder delay for radio observations, of (ii) measurement biases, of (iii) general relativity, of (iv) the interplanetary plasma, and of (v) the earth atmosphere and ionosphere.

Let us first consider the iterations programmed in PEP for earth satellite observations in the coordinate system with origin at the center of mass of the earth referred to the mean equinox and equator of 1950.0. Given coordinate time of reception t_1 as determined from the given UTC time of reception as explained in Section III, we calculate $\vec{x}_{1e}(t_1)$ as explained in Section VII-A. Using a first guess $\bar{t}_*$ to the coordinate time of reflection we calculate $\vec{x}_{be}(\bar{t}_*)$ by interpolation from an ephemeris magnetic tape. We then calculate by (185) the quantities

$$\begin{aligned} \vec{r}_1 &= \vec{x}_{be}(\bar{t}_*) - \vec{x}_{1e}(t_1) \\ |\vec{r}_1| &= \left[\sum_{j=1}^{3} \left(r_1{}^j\right)^2\right]^{1/2} \\ t_* &= t_1 - |\vec{r}_1| \end{aligned} \tag{213}$$

where we assume that the distance unit is the coordinate light second. If $|t_* - \bar{t}_*|$ is less than some input accuracy constant which is less than the measurement accuracy, then we are done. Otherwise, we take $\bar{t}_* = t_*$ as a new guess at the time of reflection and recalculate the quantities (213), continuing

the iteration until $|t_* - \bar{t}_*|$ is less than the accuracy constant. We then make a first guess $\bar{t}_2$ at the time of sending and calculate $\vec{x}_{2e}(\bar{t}_2)$ and by (185) the quantities

$$\vec{r}_2 = \vec{x}_{be}(t_*) - \vec{x}_{2e}(\bar{t}_2)$$

$$|\vec{r}_2| = \left[\sum_{j=1}^{3} (r_2{}^j)^2\right]^{1/2} \tag{214}$$

$$t_2 = t_* - |\vec{r}_2|$$

If $|t_2 - \bar{t}_2|$ is less than the input accuracy constant we are done. Otherwise we take $\bar{t}_2 = t_2$ as a new guess at the time of sending and recalculate the quantities (214), continuing the iteration until $|t_2 - \bar{t}_2|$ is less than the accuracy constant. Then the round trip coordinate time delay is

$$t_1 - t_2 = |\vec{r}_1| + |\vec{r}_2| \tag{215}$$

Let us derive a series expansion for $t_1 - t_2$ with all quantities evaluated at the fixed time of reception t_1 instead of at retarded times. We define the vectors

$$\begin{aligned} \vec{w}_1 &= \vec{x}_{be}(t_1) - \vec{x}_{1e}(t_1) \\ \vec{w}_2 &= \vec{x}_{be}(t_1) - \vec{x}_{2e}(t_1) \end{aligned} \tag{216}$$

Then ignoring powers of $t_2 - t_1$ and $t_* - t_1$ higher than the second we have (all vectors on the right hand side evaluated at receive time t_1)

$$\vec{r}_1 = \vec{w}_1 + \dot{\vec{x}}_{be}(t_* - t_1) + \frac{1}{2}\ddot{\vec{x}}_{be}(t_* - t_1)^2 + \ldots$$

$$\vec{r}_2 = \vec{w}_2 + \dot{\vec{x}}_{be}(t_* - t_1) - \dot{\vec{x}}_{2e}(t_2 - t_1)$$

$$+ \frac{1}{2}\ddot{\vec{x}}_{be}(t_* - t_1)^2 - \frac{1}{2}\ddot{\vec{x}}_{2e}(t_2 - t_1)^2 + \ldots \tag{217}$$

$$|\vec{r}_1|^2 = |\vec{w}_1|^2 + 2\vec{w}_1 \cdot \dot{\vec{x}}_{be}(t_* - t_1) + |\dot{\vec{x}}_{be}|^2(t_* - t_1)^2$$

$$+ \vec{w}_1 \cdot \ddot{\vec{x}}_{be}(t_* - t_1)^2 + \ldots$$

$$|\vec{r}_2|^2 = |\vec{w}_2|^2 + 2\vec{w}_2 \cdot \dot{\vec{x}}_{be}(t_* - t_1) - 2\vec{w}_2 \cdot \dot{\vec{x}}_{2e}(t_2 - t_1)$$

$$+ |\dot{\vec{x}}_{be}|^2(t_* - t_1)^2 + |\dot{\vec{x}}_{2e}|^2(t_2 - t_1)^2$$

$$- 2\,\dot{\vec{x}}_{be} \cdot \dot{\vec{x}}_{2e}(t_* - t_1)(t_2 - t_1)$$

$$+ \vec{w}_2 \cdot \ddot{\vec{x}}_{be}(t_* - t_1)^2 - \vec{w}_2 \cdot \ddot{\vec{x}}_{2e}(t_2 - t_1)^2 + \ldots$$

Making use of the expansion

$$\sqrt{a^2 + b} = a\sqrt{1 + \frac{b}{a^2}} = a + \frac{b}{2a} - \frac{b^2}{8a^3} + \ldots \tag{218}$$

for $|b| < a^2$ we have

$$t_1 - t_* = |\vec{r}_1| = |\vec{w}_1| + \frac{1}{2|\vec{w}_1|}\{2\vec{w}_1 \cdot \dot{\vec{x}}_{be}(t_* - t_1)$$

$$+ |\dot{x}_{be}|^2(t_* - t_1)^2 + \vec{w}_1 \cdot \ddot{\vec{x}}_{be}(t_* - t_1)^2 + \ldots\}$$

$$- \frac{(\vec{w}_1 \cdot \dot{\vec{x}}_{be})^2}{2|\vec{w}_1|^3}(t_* - t_1)^2 + \ldots$$

$$= |\vec{w}_1| + \frac{1}{2|\vec{w}_1|}\left\{2\vec{w}_1 \cdot \dot{\vec{x}}_{be}\left[-|\vec{w}_1| + \vec{w}_1 \cdot \dot{\vec{x}}_{be} + \ldots\right]\right.$$

$$\left. + |\dot{\vec{x}}_{be}|^2|\vec{w}_1|^2 + \vec{w}_1 \cdot \ddot{\vec{x}}_{be}\,|\vec{w}_1|^2 + \ldots\right\}$$

$$- \frac{(\vec{w}_1 \cdot \dot{\vec{x}}_{be})^2}{2|\vec{w}_1|} + \ldots$$

$$t_* - t_2 = |\vec{r}_2| = |\vec{w}_2| + \frac{1}{2|\vec{w}_2|}\left\{2\vec{w}_2 \cdot \dot{\vec{x}}_{be}(t_* - t_1)\right.$$

$$- 2\vec{w}_2 \cdot \dot{\vec{x}}_{2e}(t_2 - t_1) + |\dot{\vec{x}}_{be}|^2(t_* - t_1)^2$$

$$+ |\dot{\vec{x}}_{2e}|^2(t_2 - t_1)^2 - 2\dot{\vec{x}}_{be} \cdot \dot{\vec{x}}_{2e}(t_* - t_1)(t_2 - t_1)$$

$$\left. + \vec{w}_2 \cdot \ddot{\vec{x}}_{be}(t_* - t_1)^2 - \vec{w}_2 \cdot \ddot{\vec{x}}_{2e}(t_2 - t_1)^2 + \ldots\right\}$$

$$- \frac{1}{2|\vec{w}_2|^3}\left\{(\vec{w}_2 \cdot \dot{\vec{x}}_{be})^2(t_* - t_1)^2 + (\vec{w}_2 \cdot \dot{\vec{x}}_{2e})^2(t_2 - t_1)^2\right.$$

$$\left. - 2(\vec{w}_2 \cdot \dot{\vec{x}}_{be})(\vec{w}_2 \cdot \dot{\vec{x}}_{2e})(t_* - t_1)(t_2 - t_1) + \ldots\right\} + \ldots$$

$$= |\vec{w}_2| + \frac{1}{2|\vec{w}_2|}\left\{2\vec{w}_2 \cdot \dot{\vec{x}}_{be}\left[-|\vec{w}_1| + \vec{w}_1 \cdot \dot{\vec{x}}_{be} + \ldots\right]\right.$$

$$- 2\vec{w}_2 \cdot \dot{\vec{x}}_{2e}\left[-|\vec{w}_1| + \vec{w}_1 \cdot \dot{\vec{x}}_{be} - |\vec{w}_2| + \frac{|\vec{w}_1|}{|\vec{w}_2|}\vec{w}_2 \cdot \dot{\vec{x}}_{be}\right.$$

$$\left. - \vec{w}_2 \cdot \dot{\vec{x}}_{2e}\left(1 + \frac{|\vec{w}_1|}{|\vec{w}_2|}\right) + \ldots\right] + |\dot{\vec{x}}_{be}|^2|\vec{w}_1|^2$$

$$
\begin{aligned}
&+ \ |\dot{\vec{x}}_{2e}|^2(-|\vec{w}_1| - |\vec{w}_2|)^2 \\
&+ \ 2\dot{\vec{x}}_{be} \cdot \dot{\vec{x}}_{2e} \ |\vec{w}_1|(-|\vec{w}_1| - |\vec{w}_2|) \\
&+ \ \vec{w}_2 \cdot \ddot{\vec{x}}_{be} \ |\vec{w}_1|^2 - \vec{w}_2 \cdot \ddot{\vec{x}}_{2e}(-|\vec{w}_1| - |w_2|)^2 \ + \ \ldots \Big\} \\
&- \frac{1}{2|\vec{w}_2|^3} \Big\{ (\vec{w}_2 \cdot \dot{\vec{x}}_{be})^2|\vec{w}_1|^2 + (\vec{w}_2 \cdot \dot{\vec{x}}_{2e})^2(-|\vec{w}_1| - |\vec{w}_2|)^2 \\
&+ \ 2(\vec{w}_2 \cdot \dot{\vec{x}}_{be})(\vec{w}_2 \cdot \dot{\vec{x}}_{2e})|\vec{w}_1|(-|\vec{w}_1| - |\vec{w}_2|) \ + \ \ldots \Big\} + \ \ldots
\end{aligned}
$$

We then have

$$
\begin{aligned}
t_1 - t_2 &= |\vec{r}_1| + |\vec{r}_2| \\
&= |\vec{w}_1| + |\vec{w}_2| - \vec{w}_1 \cdot \dot{\vec{x}}_{be} - \frac{|\vec{w}_1|}{|\vec{w}_2|} \ \vec{w}_2 \cdot \dot{\vec{x}}_{be} \\
&\quad + \frac{|\vec{w}_1| + |\vec{w}_2|}{|\vec{w}_2|} \ \vec{w}_2 \cdot \dot{\vec{x}}_{2e} \\
&\quad - \frac{|\vec{w}_1|^2}{2|\vec{w}_2|^3} (\vec{w}_2 \cdot \dot{\vec{x}}_{be})^2 + \frac{1}{|\vec{w}_2|} (\vec{w}_1 \cdot \dot{\vec{x}}_{be})(\vec{w}_2 \cdot \dot{\vec{x}}_{be}) \\
&\quad + \frac{1}{2|\vec{w}_1|} (\vec{w}_1 \cdot \dot{\vec{x}}_{be})^2 - \frac{1}{|\vec{w}_2|} (\vec{w}_2 \cdot \dot{\vec{x}}_{2e})(\vec{w}_1 \cdot \dot{\vec{x}}_{be}) \\
&\quad + \frac{|\vec{w}_1|^2}{|\vec{w}_2|^3} (\vec{w}_2 \cdot \dot{\vec{x}}_{2e})(\vec{w}_2 \cdot \dot{\vec{x}}_{be}) \\
&\quad + \frac{|\vec{w}_2|^2 - |\vec{w}_1|^2}{2|\vec{w}_2|^3} \ (\vec{w}_2 \cdot \dot{\vec{x}}_{2e})^2
\end{aligned}
$$

$$+ \frac{1}{2}\left[|\vec{w}_1| + \frac{|\vec{w}_1|^2}{|\vec{w}_2|}\right] |\dot{\vec{x}}_{be}|^2$$

$$+ \frac{(|\vec{w}_1| + |\vec{w}_2|)^2}{2|\vec{w}_2|} |\dot{\vec{x}}_{2e}|^2$$

$$- \frac{|\vec{w}_1|(|\vec{w}_1| + |\vec{w}_2|)}{|\vec{w}_2|} (\dot{\vec{x}}_{be} \cdot \dot{\vec{x}}_{2e})$$

$$+ \frac{|\vec{w}_1|}{2} (\vec{w}_1 \cdot \ddot{\vec{x}}_{be}) + \frac{|\vec{w}_1|^2}{2|\vec{w}_2|} (\vec{w}_2 \cdot \ddot{\vec{x}}_{be})$$

$$- \frac{(|\vec{w}_1| + |\vec{w}_2|)^2}{2|\vec{w}_2|} (\vec{w}_2 \cdot \ddot{\vec{x}}_{2e}) \tag{219}$$

What would be the result if we performed the time delay iterations to get $(t_1 - t_2)_o$ in a reference frame with origin at the center of mass of the solar system rather than with origin at the center of the earth without having properly taken into account the correct transformation between the two? When the result is expressed in terms of expansion (219) the vectors $\vec{w}_1$ and $\vec{w}_2$ would be the same as in the earth centered frame, but the vectors $\dot{\vec{x}}_{\alpha e}$, $\ddot{\vec{x}}_{\alpha e}$ are replaced by

$$[\dot{\vec{x}}_{\alpha e} + \dot{\vec{x}}_{eo}] \quad , \quad [\ddot{\vec{x}}_{\alpha e} + \ddot{\vec{x}}_{eo}] \quad \text{for } \alpha = b, 2 \quad .$$

We therefore have

$$(t_1 - t_2)_o = (t_1 - t_2) + (\vec{w}_2 - \vec{w}_1) \cdot \dot{\vec{x}}_{eo}$$

$$+ \frac{1}{2|\vec{w}_1|} (\vec{w}_1 \cdot \dot{\vec{x}}_{eo})^2 + \frac{1}{2|\vec{w}_2|} (\vec{w}_2 \cdot \dot{\vec{x}}_{eo})^2$$

$$+ \frac{|\vec{w}_1|}{2} (\vec{w}_1 \cdot \ddot{\vec{x}}_{eo}) - \left(|\vec{w}_1| + \frac{|\vec{w}_2|}{2}\right) (\vec{w}_2 \cdot \ddot{\vec{x}}_{eo})$$

$$+ \frac{1}{2}(|\vec{w}_1| + |\vec{w}_2|) \, |\dot{\vec{x}}_{eo}|^2$$

$$+ (\vec{w}_1 \cdot \dot{\vec{x}}_{eo}) \left(\frac{\vec{w}_1}{|\vec{w}_1|} + \frac{\vec{w}_2}{|\vec{w}_2|}\right) \cdot \dot{\vec{x}}_{be}$$

$$+ \frac{1}{|\vec{w}_2|} (\vec{w}_2 \cdot \dot{\vec{x}}_{2e})(\vec{w}_2 - \vec{w}_1) \cdot \dot{\vec{x}}_{eo}$$

$$+ (|\vec{w}_1| + |\vec{w}_2|) \, (\ddot{\vec{x}}_{eo} \cdot \ddot{\vec{x}}_{2e}) \tag{220}$$

where all vectors are evaluated at receive time t_1 .

In the monostatic case with $\vec{w}_1 = \vec{w}_2$ the first order term is zero. Since $|\dot{\vec{x}}_{eo}| \approx 10^{-4}$ and $|\ddot{\vec{x}}_{eo}| \approx 10^{-8}$, the second order term could amount to several tens of nanoseconds for observing the moon with $|\vec{w}_i| \approx 1.4$ light seconds, the worst case in cislunar space. In the worst bistatic case with $|\vec{w}_2 - \vec{w}_1| \approx 4 \times 10^{-2}$ light seconds (the diameter of the earth) the first order term could be several microseconds. Extremely accurate bistatic round trip time delay measurements are not very likely to be made, as they would require exactly synchronized clocks at two observing sites. However, very accurate bistatic differential delay measurements exist and they are discussed in Section VII-E on long baseline interferometry.

If the error of a monostatic round trip time delay measurement were less than about 100 nanoseconds for an observation of the Moon or a far-out earth-satellite, or less than a few tens of nanoseconds for a close earth satellite, the time delay interations must be performed in a coordinate system with

origin at the center of mass of the solar system. There is an option in PEP to actually do this. The vector $\vec{r}_1$ in (213) is replaced by

$$\vec{r}_1 = \left[\vec{x}_{be}(\bar{t}_*) + \vec{x}_{eo}(\bar{t}_*)\right] - \left[\vec{x}_{1e}(t_1) + \vec{x}_{eo}(t_1)\right] \qquad (221)$$

and the vector $\vec{r}_2$ in (214) is replaced by

$$\vec{r}_2 = \left[\vec{x}_{be}(t_*) + \vec{x}_{eo}(t_*)\right] - \left[\vec{x}_{2e}(\bar{t}_2) + \vec{x}_{eo}(\bar{t}_2)\right] \qquad (222)$$

In addition to interpolating from the observed body magnetic tape to determine $\vec{x}_{be}$, PEP interpolates from a magnetic tape containing ephemerides of the 9 planets and the Moon to determine $\vec{x}_{eo}$. We contemplated using correction (220) with $\ddot{\vec{x}}_{eo}$, $\dddot{\vec{x}}_{eo}$ being calculated from mean orbit formulas (see Section X), but decided that it was better to go back to first principles for accurate observations and use formulas (221) and (222) in time delay iterations (213) and (214), especially as the magnetic tape containing the ephemerides of the 9 planets and the Moon was available to PEP.

For observations of earth satellite $\vec{x}_{be}$, the observing sites $\vec{x}_{1e}$, $\vec{x}_{2e}$ can be on another earth satellite as well as on the earth. Another time delay observable programmed in PEP is for a signal sent from a ground sending site to one satellite's transponder over to another satellite's transponder and then to a ground receiving site. Radar bounce observations can be made with radio frequency waves or with laser reflections from a corner cube.

The time delay iteration for an observation of a planet is done in PEP in a coordinate system with origin at the center of mass of the sun to obtain by (213), (214) and (215)

$$
\begin{aligned}
t_1 - t_2 &= |\vec{r}_1| + |\vec{r}_2| \\
\vec{r}_i &= \vec{x}_{ps}(t_*) - \vec{x}_{is}(t_i) \qquad i = 1, 2 \qquad (223) \\
\vec{x}_{is} &= \vec{x}_{ie}(t_i) + \vec{x}_{cs}(t_i) - \frac{M_m}{M_c}\vec{x}_{me}(t_i) \qquad i = 1, 2
\end{aligned}
$$

The difference in this time delay value and the one $(t_1 - t_2)_o$ obtained in a coordinate system with origin at the center of mass of the solar system is given by (220) with the subscripts e, b replaced by s, p respectively. We have

$$
\begin{aligned}
|\vec{w}_i| &\approx |\vec{r}_i| \approx 1000 && \text{light sec} \\
|\vec{w}_2 - \vec{w}_1| &\lesssim 10^{-2} && \text{light sec} \\
|\dot{\vec{x}}_{ps}| &\approx |\dot{\vec{x}}_{is}| \approx 10^{-4} && \text{light sec/sec} \\
|\dot{\vec{x}}_{so}| &\approx 3 \times 10^{-8} && \text{light sec/sec} \\
|\ddot{\vec{x}}_{so}| &\approx 7 \times 10^{-16} && \text{light sec/sec}^2
\end{aligned}
$$

so that dropping those terms in (220) of magnitude less than 10^{-12} seconds we obtain

$$
\begin{aligned}
(t_1 - t_2)_o = (t_1 - t_2) &+ (\vec{w}_2 - \vec{w}_1) \cdot \dot{\vec{x}}_{so} \\
&+ (\vec{w}_1 \cdot \dot{\vec{x}}_{so})\left(\frac{\vec{w}_1}{|\vec{w}_1|} + \frac{\vec{w}_2}{|\vec{w}_2|}\right) \cdot \vec{x}_{ps} \qquad (224) \\
&+ \frac{|\vec{w}_1|}{2}(\vec{w}_1 \cdot \ddot{\vec{x}}_{so}) - \left(|\vec{w}_1| + \frac{|\vec{w}_2|}{2}\right)(\vec{w}_2 \cdot \ddot{\vec{x}}_{so})
\end{aligned}
$$

where all vectors are evaluated at receive time t_1. In the monostatic case the first order term is zero, whereas the second order term can be several nanoseconds. In the bistatic case the first order term would always be less than a nanosecond.

If the accuracy of a round trip interplanetary time delay measurement were less than 10 nanoseconds, the time delay iterations would have to be performed in a coordinate system with origin at the center of mass of the solar system with the vectors $\vec{r}_i$ in (223) being replaced by

$$\vec{r}_i = \left[\vec{x}_{ps}(t_*) + \vec{x}_{so}(t_*)\right] - \left[\vec{x}_{is}(t_i) - \vec{x}_{so}(t_i)\right] \quad i = 1, 2 \quad (225)$$

There is an option in PEP to do this.

If we are observing a spherical planet of radius ρ light seconds, the round trip time delay is

$$t_1 - t_2 = |\vec{r}_1| + |\vec{r}_2| - 2\rho \quad (226)$$

rather than the value (215). The same remark applies for radio transponder observations with a delay of 2ρ seconds in passing through the satellite's transponder. In Section XI-C we discuss the dependence of ρ on the planetary latitude and longitude of the subradar point for observations of a non-spherical planet.

Since correction (226) is fairly large ($\rho \approx 10^{-2}$ light seconds), it is made in PEP in the midst of the time delay iterations so that (213) and (214) become

$$t_* = t_1 - |\vec{r}_1| - \rho$$

$$t_2 = t_* - |\vec{r}_2| - \rho \quad (227)$$

For radio transponder observations, which could get to the nanosecond accuracy level, the transponder delay 2ρ is less than a microsecond, but the correction (226) is still made in the midst of the time delay iterations (227). The transponder delay is dependent on the actual electronics and the temperature. It does not matter what it is as long as it is known or can be solved for in fitting to data. For laser corner reflector observations $\rho = 0$.

The only measurement bias programmed in PEP for time delay observations is a constant additive bias for each observing site. One could not separate the effects of all the site biases and the radius or transponder delay ρ in fitting to data.

Corrections are made to the round trip coordinate time delay $t_2 - t_1$ due to propagation effects of general relativity, the interplanetary plasma, and the earth ionosphere and atmosphere as explained in Sections VII-B-1, 2, 3 below. Then the coordinate time delay is converted to the observer's A1 atomic time units as explained in Section VII-B-1 below. Finally, if the raw observable is in UTC time units, the theoretical value of the observation in A1 time units is multiplied by (47). This is only necessary before 1.0 January 1972, since after that date UTC is not offset in frequency from A.1.

VII-B-1. Effect of General Relativity

The theory of general relativity predicts a propagation effect on the round trip coordinate time delay and an effect in converting the round trip coordinate time delay to the observer's atomic time units.

In PEP we only apply the general relativity propagation correction for interplanetary observations. According to Ref. 3, p. 43, the expression derived above in Section VII-B for the round trip coordinate time delay should have added to it the following term in harmonic coordinates:

$$\Delta t_{rel} = 2\left(\frac{\gamma M_s}{c^2}\right)\sum_{i=1}^{2} \log_e \left[\frac{|\vec{x}_{es}(t_i)|+|\vec{x}_{ps}(t_*)|+|\vec{r}_i|}{|\vec{x}_{es}(t_i)|+|\vec{x}_{ps}(t_*)|-|\vec{r}_i|}\right] \tag{228}$$

where the relative position vectors $\vec{r}_1$ and $\vec{r}_2$ are given by (186) and where γ is the gravitational constant, M_s the mass of the sun and c the velocity of light at a large distance from the sun. This effect arises from the Schwarzschild metric of the sun and could amount to 200 μsec when observing Mercury or Venus from the earth at superior conjunction when the radar ray passes close to the sun's limb.

Expression (228) takes on different forms in non-harmonic coordinate systems (see Ref. 25), but this does not matter in the following sense. As long as the equations of motion and the formulas for the observables are derived in the same general relativity coordinate system, the same fit to the data would be obtained no matter what coordinates were employed. Different values would be obtained for coordinate dependent parameters such as initial conditions of the equations of motion, but the observed minus theoretical residuals for the data would be the same after convergence to the maximum liklihood parameter estimates. This is a mathematical statement not a physical statement.

In deriving the general relativity relation (41) (or Table I) between coordinate and atomic times, we used the Newtonian approximation (32) to the metric rather than the Schwarzschild metric in harmonic coordinates. However, the discrepancies between this approximation and the Schwarzschild metric are the next order down in U/c^2 or $v^2/c^2 \approx 10^{-8}$, so the difference in epoch specification between using the Newtonian approximation and the Schwarzschild metric is below 0.1 nanoseconds, which is completely ignorable. There is an even smaller discrepancy in delay measurement.

Having determined the round trip coordinate time delay $t_1 - t_2$ and having made all the corrections to it for propagation effects, we must convert it to the observer's atomic time units. Namely, the round trip time delay Δt in the observer's atomic time units is

$$\Delta t = t_1 - t_2 + (CT - A1)_2 - (CT - A1)_1 \tag{229}$$

where the difference between coordinate time and atomic time $(CT\text{-}A1)_i$ at time t_i is evaluated using (41) or Table I. This effect is of importance for interplanetary time delay measurements, but not for earth satellite observations.

The diurnal variation in (CT-A1) due to the earth's rotation is important to include in (229) for accurate interplanetary time delay measurements, but we do not discuss it here.

VII-B-2. Effect of Interplanetary Media

In PEP it is assumed that the interplanetary electron density is inversely proportional to the square of the distance from the sun. From this assumption it can be derived that the expression to be added to the theoretical value of the round trip time delay is

$$\Delta t_{plasma} = \frac{\varepsilon}{f^2}\frac{1}{d}\left|\arctan\left(\frac{\vec{r}_1 \cdot \vec{x}_{ps}}{d|\vec{r}_1|}\right) - \arctan\left(\frac{\vec{r}_1 \cdot \vec{x}_{es}}{d|\vec{r}_1|}\right)\right| \tag{230}$$

where the relative position vector $\vec{r}_1$ is given by (186) and where

$$d = \left|\frac{\vec{r}_1}{|\vec{r}_1|} \times \vec{x}_{ps}\right|$$

f = frequency of radiation

ε = constant

For the precision of concern to us it does not matter whether we use $\vec{r}_1$ and evaluate $\vec{x}_{es}$ at time t_1 or whether we use $\vec{r}_2$ and evaluate $\vec{x}_{es}$ at time t_2. In terms of the constant

$\bar{\varepsilon}$ = number of electrons per cubic centimeter at 1 astronomical unit from the sun

we have

$$\varepsilon = (8.2 \times 10^7)(AU)^2\,\bar{\varepsilon} \tag{231}$$

where AU is the value of the astronomical unit in light seconds if d is measured in light seconds, Δt_{plasma} in seconds and f in cycles per second.

We could write

$$\bar{\varepsilon} = \bar{\varepsilon}_o + \bar{\varepsilon}_1 \sin 2\pi T \tag{232}$$

with T being the fraction of the eleven year solar cycle.

VII-B-3. Effect of Earth Atmosphere and Ionosphere

The terms

$$\begin{aligned} \Delta t_{atm} &= \text{effect of earth neutral atmosphere on group delay} \\ \Delta t_{ion} &= \text{effect of earth ionosphere on group delay} \end{aligned} \tag{233}$$

are programmed in PEP, but the algorithms for evaluating them are presently undergoing substantial changes. We shall therefore not persue specific models in this note.

VII-C. Doppler Shift

The time delay discussed in Section VII-B is the group or signal delay. The phase delay is the same as the group delay for a dispersionless media. Corrections due to plasma, etc., which are different for phase delay than for group delay are given below.

The Doppler phase observable used for Mariner, Surveyor and other spacecraft is as follows. A monochromatic wave at frequency f (in UTC time units) is sent from a sending site to a transponder aboard the spacecraft which sends it back to a receiving site. At the receiving site the number of wave crests between UTC receive times t_{ca} and t_{cb} are counted with $t_c = t_{cb} - t_{ca}$ being the counting interval. The sequence of wave crests received between t_{ca} and t_{cb} were sent between times t'_{ca} and t'_{cb}, where $\Delta\tau_i = t_{ci} - t'_{ci}$ are the phase delays $(i = a,b)$. The number of wave crests sent is $f(t'_{cb} - t'_{ca})$ and is equal to the number received. The phase delay Doppler observable Δf is the number of wave crests received in the counting interval t_c divided by

the counting interval minus the frequency. We therefore have

$$\Delta f = \frac{f}{t_c} (\Delta\tau_a - \Delta\tau_b) \tag{234}$$

where $\Delta\tau_a$, $\Delta\tau_b$ are phase delays as functions of receive times t_{ca} and t_{cb} at each end of the counting interval t_c.

For the earlier Mariner spacecraft we must take the integer part of $t_c\Delta f + f$ before dividing by t_c and subtracting f for comparing with observations, since the ground equipment did not involve doppler resolvers for counting fractional waves. However, (234) is the theoretical value of the phase delay doppler observable for more recent spacecraft. For simplicity we ignored any alteration in frequency due to the spacecraft transponder or ground equipment in deriving (234). But in fact the Mariner and Surveyor mission dependent frequency alterations have been programmed in PEP.

Now let us consider the instantaneous doppler. Let $f_r(t_r)$ and $\Delta\tau(t_r)$ be the frequency and round trip phase delay, respectively, in UTC time units of a signal received at UTC time t_r. Successive crests of the signal detected at t_r and approximately $t_r + 1/f_r(t_r)$ were transmitted, respectively, at $t_r - \Delta\tau(t_r)$ and approximately $t_r + 1/f_r(t_r) - \Delta\tau(t_r + 1/f_r(t_r))$. The difference between these latter is $1/f$, where f is the sending frequency:

$$\frac{1}{f} \approx \frac{1}{f_r(t_r)} - \Delta\tau\left(t_r + 1/f_r(t_r)\right) + \Delta\tau(t_r)$$

Since the instantaneous frequency is the time derivative of phase, it follows exactly that

$$\frac{1}{f} = \frac{1}{f_r(t_r)} \left(1 - \frac{d\Delta\tau(t_r)}{dt_r}\right)$$

so that the doppler shift $\Delta f = f_r - f$ is

$$\Delta f = - f \frac{d\Delta\tau(t_r)}{dt_r} \tag{235}$$

as a function of UTC receive time t_r. As a function of send time t_s an exactly similar derivation would yield

$$\Delta f = -\frac{d\Delta\tau(t_s)/dt_s}{1 + d\Delta\tau(t_s)/dt_s} \tag{236}$$

All the observables in PEP are assumed to be functions of receive time.

Let t_1 and t_2 be the receiving and sending coordinate times corresponding to receiving and sending UTC times t_r and t_s, respectively. Let $\Delta\tau$ be the round trip phase delay and let Δt be the round trip group delay, both expressed in UTC time units. By the results of Section VII-B, the group delay is

$$\begin{aligned}\Delta t = {} & (1 - \text{fractional offset of UTC from A1}) \Big[(t_1 - t_2) \\ & + \Delta t_{rel} + \Delta t_{plasma} + \Delta t_{ion} + \Delta t_{atm} \\ & + (CT - A1)_2 - (CT - A1)_1\Big]\end{aligned} \tag{237}$$

where $(t_1 - t_2)$ represents the round trip distance (215) in light seconds and where the offset of UTC from A1 is given in Table II (zero after 1.0 January 1972). The phase delay is then

$$\begin{aligned}\Delta\tau = {} & (1 - \text{fractional offset of UTC from A1}) \Big[(t_1 - t_2) \\ & + \Delta\tau_{rel} + \Delta\tau_{plasma} + \Delta\tau_{ion} + \Delta\tau_{atm} \\ & + (CT - A1)_2 - (CT - A1)_1\Big]\end{aligned} \tag{238}$$

where

$$\begin{aligned}\Delta\tau_{rel} &= \Delta t_{rel} \\ \Delta\tau_{plasma} &= -\Delta t_{plasma} \\ \Delta\tau_{ion} &= -\Delta t_{ion} \\ \Delta\tau_{atm} &= \Delta t_{atm}\end{aligned} \tag{239}$$

For dispersionless effects such as those due to general relativity or the earth's neutral atmosphere, the phase and group delays are the same, but where dispersion due to charged particles is present they have the opposite sign.

Formulas (238) and (239) can be applied directly to calculating the Mariner phase delay doppler observable (234). For the instantaneous doppler (235) we must take derivatives of (238) and (239). Let t_r be the receiving UTC time and t_1 the receiving coordinate time related by

$$t_r = (1 - \text{fractional offset of UTC from A1}) \left[t_1 - (CT - A1)_1\right] + \text{constant} \tag{240}$$

By the chain rule we have

$$\frac{d}{dt_r} = \frac{1}{(1 - \text{fractional offset of UTC from A1})\left[1 - \frac{d}{dt_1}(CT - A1)_1\right]} \frac{d}{dt_1} \tag{241}$$

Thus, by (235) and (238) the instantaneous doppler shift is

$$\Delta f = -\frac{f}{\left[1 - \frac{d}{dt_1}(CT - A1)_1\right]} \left[\frac{d}{dt_1}(t_1 - t_2) + \frac{d\Delta\tau_{rel}}{dt_1} \right.$$

$$\frac{d\Delta\tau_{plasma}}{dt_1} + \frac{d\Delta\tau_{ion}}{dt_1} + \frac{d\Delta\tau_{atm}}{dt_1}$$

$$\left. + \frac{d}{dt_1}(CT - A1)_2 - \frac{d}{dt_1}(CT - A1)_1\right] \tag{242}$$

or to second order in the rate of change of $(CT - A1)_1$

$$\Delta f = -f\left[\frac{d}{dt_1}(t_1 - t_2) + \frac{d\Delta\tau_{rel}}{dt_1}\right.$$

$$+ \frac{d\Delta\tau_{plasma}}{dt_1} + \frac{d\Delta\tau_{ion}}{dt_1} + \frac{d\Delta\tau_{atm}}{dt_1}$$

$$\left. + \frac{d}{dt_1}(CT - A1)_2 + \left(\frac{d}{dt_1}(CT - A1)_1\right)^2\right] \tag{243}$$

By (215) we have

$$t_1 - t_* = |\vec{r}_1|$$

$$t_1 - t_2 = |\vec{r}_1| + |\vec{r}_2| \tag{244}$$

where by (185)

$$\vec{r}_1 = \vec{x}_{be}(t_*) - \vec{x}_{1e}(t_1)$$

$$= \vec{x}_{be}(t_1 - |\vec{r}_1|) - \vec{x}_{1e}(t_1)$$

$$\vec{r}_2 = \vec{x}_{be}(t_2) - \vec{x}_{2e}(t_2)$$

$$= \vec{x}_{be}(t_1 - |\vec{r}_1|) - \vec{x}_{2e}(t_1 - |\vec{r}_1| - |\vec{r}_2|) \tag{245}$$

for an earth satellite b. The calculations for planetary observations with $\vec{r}_1$, $\vec{r}_2$ being given by (186) are exactly similar to the following calculations for an earth satellite. The accuracy that would probably exist for instantaneous doppler observations is such that corrections (221), (222) and (225) from the center of earth for earth satellite observations or from the center of the sun for planetary observations to the center of mass of the solar system can probably be ignored.

Differentiating (244) we have

$$\frac{d}{dt_1}(t_1 - t_2) = \sum_{i=1}^{2} \frac{1}{|\vec{r}_i|} \vec{r}_i \cdot \frac{d\vec{r}_i}{dt_1} \tag{246}$$

where by (245)

$$\begin{aligned}
\frac{d\vec{r}_1}{dt_1} &= \ddot{\vec{x}}_{be}(t_*) \left[1 - \frac{1}{|\vec{r}_1|} \vec{r}_1 \cdot \frac{d\vec{r}_1}{dt_1}\right] - \ddot{\vec{x}}_{1e}(t_1) \\
\frac{d\vec{r}_2}{dt_1} &= \ddot{\vec{x}}_{be}(t_*) \left[1 - \frac{1}{|\vec{r}_1|} \vec{r}_1 \cdot \frac{d\vec{r}_1}{dt_1}\right] \\
&\quad - \ddot{\vec{x}}_{2e}(t_2) \left[1 - \sum_{i=1}^{2} \frac{1}{|\vec{r}_i|} \vec{r}_i \cdot \frac{d\vec{r}_i}{dt_1}\right]
\end{aligned} \tag{247}$$

Expanding (247) to third order we obtain

$$\begin{aligned}
\frac{d\vec{r}_1}{dt_1} &= \ddot{\vec{r}}_1 - \ddot{\vec{x}}_{be}(t_*) \left(\frac{\vec{r}_1}{|\vec{r}_1|} \cdot \ddot{\vec{r}}_1\right) \\
&\quad + \ddot{\vec{x}}_{be}(t_*) \left(\frac{\vec{r}_1}{|\vec{r}_1|} \cdot \ddot{\vec{r}}_1\right) \left[\frac{\vec{r}_1}{|\vec{r}_1|} \cdot \ddot{\vec{x}}_{be}(t_*)\right] \\
&\quad + \ldots
\end{aligned} \tag{248}$$

$$
\begin{aligned}
\frac{d\vec{r}_2}{dt_1} = \ddot{\vec{r}}_2 &+ \ddot{\vec{x}}_{2e}(t_2)\left(\frac{\vec{r}_2}{|\vec{r}_2|} \cdot \ddot{\vec{r}}_2\right) - \ddot{\vec{r}}_2\left(\frac{\vec{r}_1}{|\vec{r}_1|} \cdot \ddot{\vec{r}}_1\right) \\
&+ \ddot{\vec{x}}_{2e}(t_2)\left(\frac{\vec{r}_2}{|\vec{r}_2|} \cdot \ddot{\vec{r}}_2\right)\left[\frac{\vec{r}_2}{|\vec{r}_2|} \cdot \ddot{\vec{x}}_{2e}(t_2)\right] \\
&+ \ddot{\vec{r}}_1\left(\frac{\vec{r}_1}{|\vec{r}_1|} \cdot \ddot{\vec{x}}_{be}(t_*)\right)\left(\frac{\vec{r}_1}{|r_1|} \cdot \ddot{\vec{r}}_1\right) \\
&- \ddot{\vec{x}}_{2e}\left(\frac{\vec{r}_1}{|\vec{r}_1|} \cdot \ddot{\vec{r}}_1\right)\left(\frac{\vec{r}_2}{|\vec{r}_2|} \cdot \ddot{\vec{r}}_2\right) \\
&+ \ldots
\end{aligned}
\tag{249}
$$

where

$$
\ddot{\vec{r}}_i = \ddot{\vec{x}}_{be}(t_*) - \ddot{\vec{x}}_{ie}(t_i) \qquad i = 1, 2 \tag{250}
$$

If $\vec{r}_1$, $\vec{r}_2$ were given by (186) instead of (185) we would have

$$
\ddot{\vec{r}}_i = \ddot{\vec{x}}_{ps}(t_*) - \left[\ddot{\vec{x}}_{ie}(t_i) + \ddot{\vec{x}}_{cs}(t_i) - \frac{M_m}{M_c}\ddot{\vec{x}}_{me}(t_i)\right] \qquad i = 1, 2 \tag{251}
$$

and the subscripts b and e in (248) and (249) would be replaced by p and s, respectively.

For the accuracy that would probably exist for an instantaneous doppler observation, the derivatives of (CT-A1) can be ignored.

By (239) and (228) the relativity effect on an instantaneous planetary doppler observation is

$$\frac{d\Delta\tau_{rel}}{dt_1} = \frac{d\Delta t_{rel}}{dt_1} = 2\left(\frac{\gamma M_s}{c^2}\right) \sum_{i=1}^{2} \left[\frac{1}{|\vec{x}_{es}(t_i)| + |\vec{x}_{ps}(t_*)| + |r_i|} \right.$$

$$\left(\frac{\vec{x}_{es}(t_i) \cdot \dot{\vec{x}}_{es}(t_i)}{|\vec{x}_{es}(t_i)|} + \frac{\vec{x}_{ps}(t_i) \cdot \dot{\vec{x}}_{ps}(t_i)}{|\vec{x}_{ps}(t_i)|} \right.$$

$$\left. - \frac{\vec{r}_i \cdot \dot{\vec{r}}_i}{|\vec{r}_i|} \right) - \frac{1}{|\vec{x}_{es}(t_i)| + |x_{ps}(t_i)| - |\vec{r}_i|}$$

$$\left(\frac{\vec{x}_{es}(t_i) \cdot \dot{\vec{x}}_{es}(t_i)}{|\vec{x}_{es}(t_i)|} + \frac{\vec{x}_{ps}(t_i) \cdot \dot{\vec{x}}_{ps}(t_i)}{|\vec{x}_{ps}(t_i)|} \right.$$

$$\left. \left. + \frac{\vec{r}_i \cdot \dot{\vec{r}}_i}{|\vec{r}_i|} \right) \right] \tag{252}$$

By (239) and (230) the interplanetary plasma effect on an instantaneous planetary doppler observation is

$$\frac{d\Delta\tau_{plasma}}{dt_1} = - \frac{d\Delta t_{plasma}}{dt_1}$$

$$= - \frac{\varepsilon}{f^2} \frac{\dot{d}}{d^2} \left| \arctan\left(\frac{\vec{r}_1 \cdot \vec{x}_{ps}}{d|\vec{r}_1|}\right) - \arctan\left(\frac{\vec{r}_1 \cdot \vec{x}_{es}}{d|r_1|}\right) \right|$$

$$\pm \frac{\varepsilon}{f^2} \frac{1}{d} \left\{ \frac{1}{1 + \left(\frac{\vec{r}_1 \cdot \vec{x}_{ps}}{d|\vec{r}_1|}\right)^2} \left[\frac{1}{d|\vec{r}_1|} \left(\dot{\vec{r}}_1 \cdot \vec{x}_{ps} + \vec{r}_1 \cdot \dot{\vec{x}}_{ps} \right) \right. \right.$$

$$- \frac{\vec{r}_1 \cdot \vec{x}_{ps}}{d|\vec{r}_1|} \left(\frac{\dot{d}}{d} + \frac{\vec{r}_1 \cdot \dot{\vec{r}}_1}{|\vec{r}_1|^2} \right)$$

$$- \frac{1}{1 + \left(\frac{\vec{r}_1 \cdot \vec{x}_{ps}}{d|\vec{r}_1|} \right)^2} \left[\frac{1}{d|\vec{r}_1|} \left(\dot{\vec{r}}_1 \cdot \vec{x}_{es} + \vec{r}_1 \cdot \dot{\vec{x}}_{es} \right) \right.$$

$$\left. \left. - \frac{\vec{r}_1 \cdot \vec{x}_{es}}{d|\vec{r}_1|} \left(\frac{\dot{d}}{d} + \frac{\vec{r}_1 \cdot \dot{\vec{r}}_1}{|\vec{r}_1|^2} \right) \right] \right\} \tag{253}$$

where

$$\dot{d} = \frac{1}{d} \left(\frac{\vec{r}_1}{|\vec{r}_1|} \times \vec{x}_{ps} \right) \cdot \left[\frac{\dot{\vec{r}}_1}{|\vec{r}_1|} \times \vec{x}_{ps} \right.$$

$$\left. + \frac{\vec{r}_1}{|\vec{r}_1|} \times \dot{\vec{x}}_{ps} - \frac{\vec{r}_1}{|\vec{r}_1|} \times \vec{x}_{ps} \left(\frac{\vec{r}_1 \cdot \dot{\vec{r}}_1}{|\vec{r}_1|^2} \right) \right]$$

$$\pm = + \text{ if } \frac{\vec{r}_1 \cdot \vec{x}_{ps}}{d|\vec{r}_1|} \geq \frac{\vec{r}_1 \cdot \vec{x}_{es}}{d|\vec{r}_1|}$$

$$\pm = - \text{ if } \frac{\vec{r}_1 \cdot \vec{x}_{ps}}{d|\vec{r}_1|} < \frac{\vec{r}_1 \cdot \vec{x}_{es}}{d|\vec{r}_1|}$$

An additive constant bias in doppler shift to be solved for in fitting to data is programmed in PEP.

VII-D. Angular Measurements

We wish to determine the theoretical value of an angular measurement made from site $\vec{x}_{1e}(t_1)$ at coordinate time t_1 of an earth satellite or the moon $\vec{x}_{be}(t_*)$ using light reflected or emitted from the satellite or moon at

coordinate time t_*. We first calculate the vector

$$\vec{r}_1 = \vec{x}_{be}(t_*) - \vec{x}_{1e}(t_1) \tag{254}$$

just as in Section VII-B using an iteration to determine the retarded coordinate time t_* given the receive coordinate time t_1. In PEP this iteration is performed in a coordinate system with origin at the center of mass of the earth. By (216) and (217) we have to first order

$$\vec{r}_1 = \vec{w}_1 - |\vec{w}_1| \dot{\vec{x}}_{be} \tag{255}$$

where all vectors on the right hand side are evaluated at receive time t_1.

What would be the result if we performed the retarded time iterations to calculate $\vec{r}_{10}$ in a reference frame with origin at the center of mass of the solar system as we should according to the precepts of special relativity? When the result is expressed in terms of the expansion (255) the vector $\vec{w}_1$ is the same as in the earth centered frame, but the vector $\dot{\vec{x}}_{be}$ is replaced by $[\dot{\vec{x}}_{be} + \dot{\vec{x}}_{eo}]$. We then have

$$\vec{r}_{10} = \vec{r}_1 - |\vec{w}_1| \dot{\vec{x}}_{eo} \tag{256}$$

The light ray approaches the observed from the direction $\vec{r}_{10}$ in inertial space. In the observer's reference frame this direction is displaced due to aberration caused by the motion of the observer $\left(\dot{\vec{x}}_{1e} + \dot{\vec{x}}_{eo}\right)$ relative to the center of mass of the solar systems. In classical physics this phenomenon of light is treated in analogy with rain drops striking the windshield of a moving automobile at a different angle than they do for a stationary automobile, so that the vector $\vec{q}$ that points in the observer's reference frame towards the observed body is

$$\vec{q} = \vec{r}_{10} + |\vec{r}_{10}| \left(\dot{\vec{x}}_{1e} + \dot{\vec{x}}_{eo}\right) \tag{257}$$

We note that velocities are in units of light seconds per second and that we only care about vector directions, not magnitudes. We have

$$|\vec{r}_{10}| \approx |\vec{r}_1| \approx |\vec{w}_1| \tag{258}$$

so that

$$\vec{q} = \vec{r}_1 + |\vec{r}_1| \dot{\vec{x}}_{1e} \tag{259}$$

The second order terms which would arise if we expanded (255) and (256) to second order and used the special relativity formula for aberration instead of the classical physics formula (257) would be less than 10^{-2} seconds of arc in angle. We do not bother with these second order effects because as yet we have not encountered angular measurements with accuracies better than 0.1 seconds of arc. Our conclusion is that we obtain the same results with sufficient accuracy making the light time and aberration corrections in an earth centered frame as we would in a frame with origin at the center of mass of the solar system.

For angular observations of the sun $s = p$ or a planet p we have by (186)

$$\vec{r}_1 = \vec{x}_{ps}(t_*) - \left[\vec{x}_{1e}(t_1) + \vec{x}_{cs}(t_1) - \frac{M_m}{M_c} \vec{x}_{me}(t_1)\right] \tag{260}$$

and the light time iteration to determine reflection time t_* given t_1 is done in a coordinate system with origin at the center of the sun. The aberration correction (259) is

$$\vec{q} = \vec{r}_1 + |\vec{r}_1| \left[\dot{\vec{x}}_{1e}(t_1) + \dot{\vec{x}}_{cs}(t_1) - \frac{M_m}{M_c} \dot{\vec{x}}_{me}(t_1)\right] \tag{261}$$

Angular observations of a star p with unit vector $\vec{x}_{po}$ pointing from the center of mass of the solar system to the star are expressed by (187)

in terms of the vector

$$\vec{r}_1 = \vec{x}_{po} - \frac{1}{R}\left[\vec{x}_{1e}(t_1) + \vec{x}_{cs}(t_1) - \frac{M_m}{M_c}\,\vec{x}_{me}(t_1) + \vec{x}_{so}(t_1)\right] \tag{262}$$

where R is the distance to the star. For most stars we can assume $R = \infty$. The aberration correction is

$$\vec{q} = \vec{r}_1 + |\vec{r}_1|\left[\dot{\vec{x}}_{1e}(t_1) + \dot{\vec{x}}_{cs}(t_1) - \frac{M_m}{M_c}\,\dot{\vec{x}}_{me}(t_1) + \dot{\vec{x}}_{so}(t_1)\right] \tag{263}$$

The vector $\vec{r}_1$ giving the direction from which light approaches the observer needs to be corrected for the bending of light effect of general relativity if the light ray passes near to the sun. We can ignore the bending due to the gravitational fields of the earth, moon and planets for the accuracy of concern to us. Let $\vec{x}_{1s}$ be the vector from the sun to the observing site at receive time t_1,

$$\vec{x}_{1s} = \vec{x}_{1e}(t_1) + \vec{x}_{cs}(t_1) - \frac{M_m}{M_c}\,\vec{x}_{me}(t_1) \tag{264}$$

Let the impact parameter d be the closest approach of the straight line along $\vec{r}_1$ to the sun. Referring to Fig. 7 we see that

$$\vec{d} = \vec{x}_{1s} - \frac{\vec{x}_{1s}\cdot\vec{r}_1}{|\vec{r}_1|^2}\,\vec{r}_1 \;, \quad d = |\vec{d}| \tag{265}$$

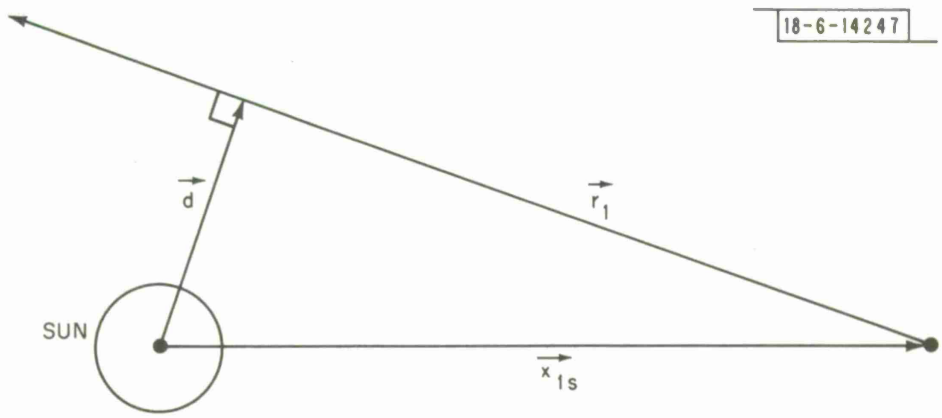

Fig. 7. Impact parameter d for light ray passing near the sun.

Then by Ref. 3, p. 38, for observing a star on the opposite side of the sun from the earth, the angle of deflection of the light ray is

$$\alpha = \frac{2}{d}\left(\frac{\gamma M_s}{c^2}\right)\left[1 + \frac{|\vec{x}_{1s} - \vec{d}|}{|\vec{x}_{1s}|}\right] \tag{266}$$

where γ is the gravitational constant, M_s the mass of the sun and c the velocity of light. If $|\vec{x}_{1s}| >> d$ we obtain the classical result (see Ref. 11, p. 202)

$$\alpha = \frac{4}{d}\left(\frac{\gamma M_s}{c^2}\right) \tag{267}$$

so that for d being 1 solar radius, $\alpha = 1''.75$. For a planet p with $\vec{r}_1 = \vec{x}_{ps}(t_*) - \vec{x}_{1s}(t_1)$ we have by Ref. 3, p. 38-39,

$$\alpha = \frac{2}{d}\left(\frac{\gamma M_s}{c^2}\right)\left[\frac{|\vec{x}_{1s}(t_1) - \vec{d}|}{|\vec{x}_{1s}(t_1)|} \pm \frac{|\vec{x}_{ps}(t_*) - \vec{d}|}{|x_{ps}(t_*)|}\right] \tag{268}$$

where the $+$ sign is to be used if the observer and the planet are on the opposite sides of the sun and the $-$ sign is to be used if the observer and the planet are on the same side of the sun. Now let $\vec{r}_1'$ point in the direction from which the light actually arrives at the observer. We have

$$\vec{r}_1' = \vec{r}_1 - \eta\vec{d}, \qquad \vec{r}_1 \perp \vec{d} \tag{269}$$

where the quantity η is to be determined. Since

$$|\vec{r}_1'|^2 = |\vec{r}_1|^2 + \eta^2 |\vec{d}|^2$$

$$|\vec{r}_1'|\,|\vec{r}_1| \sin\alpha = |\vec{r}_1' \times \vec{r}_1| = \eta\,|\vec{d}|\,|\vec{r}_1|$$

we obtain

$$\eta = \frac{|\vec{r}_1| \sin \alpha}{|\vec{d}| \sqrt{1 - \sin^2 \alpha}} \approx \frac{|\vec{r}_1|}{d} \alpha \tag{270}$$

for α a small angle in radians. The vector $\vec{r}_1$ should be replaced by $\vec{r}_1'$ before applying the aberration correction to get $\vec{q}$.

We can then apply an earth atmosphere refraction correction to $\vec{q}$ before calculating the angular observables for ground based observations. However, we discuss this correction only for azimuth-elevation observations (Section VII-D-1), since for other angular measurements the observer usually applies this correction to the observed values. For some observation types the observer even applies some or part of the aberration and light time corrections before publishing his results. It is necessary in PEP to only correct for the corrections that the observer has not corrected for.

VII-D-1. Azimuth-Elevation

Let $\vec{N}$ be the unit normal to the geod at the observing site referred to the mean equinox and equator of 1950.0. Its components in the coordinate system fixed in the earth are given by (199) and the desired components referred to the mean equinox and equator of 1950.0 are then obtained by applying the transformation (189). The components in the 1950.0 reference system of the vector $\vec{P}$ pointing along the axis of figure of the earth are obtained by applying transformation (189) to (0, 0, 1). The vector $\vec{M}$ defined by

$$\vec{M} = \vec{P} - (\vec{P} \cdot \vec{N}) \vec{N} \tag{271}$$

points along the meridian through the site towards the north.

Let $\vec{q}$ be the vector pointing towards the apparant position of the observed satellite as given by (259) and let $\vec{q}_p$ be its projection on the tangent plane to the geoid,

$$\vec{q}_p = \vec{q} - (\vec{q} \cdot \vec{N}) \vec{N} \tag{272}$$

Then

$$\text{elevation} = 90^{\circ} - \text{angle between } \vec{N} \text{ and } \vec{q}$$

$$= \sin^{-1}\left[\frac{\vec{N} \cdot \vec{q}}{|\vec{q}|}\right] \tag{273}$$

$$\text{azimuth} = \text{angle between } \vec{M} \text{ and } \vec{q}_p$$

measured clockwise from true north when looking down on the earth (east = + 90°)

$$= \tan^{-1}\left[\frac{\left(\vec{q}_p \times \vec{M}\right) \cdot \vec{N}}{\vec{q}_p \cdot \vec{M}}\right] \tag{274}$$

In order to remove the quadrant ambiguity in azimuth in the above formula we use

$$\sin(\text{azimuth}) = \frac{\left(\vec{q}_p \times \vec{M}\right) \cdot \vec{N}}{|\vec{q}_p|\ |\vec{M}|}$$

$$\cos(\text{azimuth}) = \frac{\vec{q}_p \cdot \vec{M}}{|\vec{q}_p|\ |\vec{M}|} \tag{275}$$

Before using the vector $\vec{q}$ from (259) we should correct it for refraction. The refraction correction could actually be determined at the observing site by observing (radio) stars with known positions and could thus include any effects such as antenna droop which are special to the site as well as the effect of atmospheric refraction. The correction would be a function of elevation or zenith angle.

There are programmed in PEP constant biases in azimuth and elevation. For observing synchronous satellites where the azimuth and elevation do not vary greatly, such constant biases determined by fitting to data will absorb

refraction corrections (if they were not already made) as well as instrumental biases. If the satellite wanders all over the sky, this situation would not exist and the refraction correction would have to be coded if the accuracy of the data warrants.

VII-D-2. Against Star Background

If photographic observations are made of an object against the star background, the right ascension and declination of the object referred to the mean equinox and equator of 1950.0 can be determined by measuring the displacement of the object from given stars on the photographic plate and utilizing the coordinates of the stars in a star catalogue. Given the way the observation is reduced one would think there were no need to apply refraction or aberration corrections to the vector $\vec{r}_1$ pointing from the observing site to the apparent position of the object. However, in constructing star catalogues what is called elliptic aberration was not corrected for. Photographic observations which are called astrometric are reduced directly from the star catalogue and do not have elliptic aberration removed, whereas astrographic observations have all the aberration removed.

To first order in the eccentricity e, the velocity $\vec{v}$ in the elliptic motion of the earth moon barycenter is

$$\vec{v} = \sqrt{\frac{\mu}{a}}\ \vec{\theta} + \sqrt{\frac{\mu}{a}}\ e\ \vec{j} \tag{276}$$

where $a = 1$ A.U. is the semimajor axis, μ is the gravitational constant times the mass of the sun, and

$\vec{\theta}$ = normal to radius vector in direction of motion

$\vec{j}$ = normal to apsidal line positive in the direction of motion at perihelion.

The constant velocity in the $\vec{j}$ direction is ignored in making the aberration corrections for the star observations used in constructing star catalogues, whereas the velocity $\vec{\theta}$ and the other velocities due to the rotation of the earth and the motions of the earth relative to the earth-moon barycenter and the sun relative to center of mass of the solar system are considered in constructing star catalogues. Therefore for astrometric observations we must correct the vector $\vec{r}_1$ for the so-called elliptic aberration due to this constant velocity vector. That is, in place of (259) or (261) we have

$$\vec{q} = \vec{r}_1 + |\vec{r}_1| \sqrt{\frac{\mu}{a}} \; e \, \vec{j} \tag{277}$$

Now by Ref. 6, p. 98, we have

$$\sqrt{\frac{\mu}{a}} \; e = \frac{0.017202}{1} \times 0.01672 \text{ AU/day}$$

$$= 1.661 \times 10^{-6} \text{ light sec/sec}$$

ω = longitude of perihelion of earth orbit referred to mean equinox of 1950.0

$$= 102^{\circ}04'50''$$

ε_o = mean obliquity of ecliptic in 1950.0

$$= 23^{\circ}26'45''$$

and by Ref. 6, p. 27, the components of $\vec{j}$ in the coordinate system referred to the mean equinox and equator of 1950.0 are

$$j^1 = -\sin\omega$$

$$j^2 = \cos\omega \cos\varepsilon_o$$

$$j^3 = \cos\omega \sin\varepsilon_o$$

Let $\vec{q}$ denote the vector $\vec{r}_1$ corrected for elliptic aberration for astrometric observations or just $\vec{r}_1$ itself for astrographic observations. Let (q^1, q^2, q^3) be the components of $\vec{q}$ in the coordinate system referred to the mean equinox and equator of 1950.0. We have (see Fig. 8)

$$\delta = \text{declination}$$

$$= \sin^{-1}\left(\frac{q^3}{|\vec{q}|}\right) \tag{278}$$

$$\alpha = \text{right ascension}$$

$$= \tan^{-1}\left(\frac{q^2}{q^1}\right) \tag{279}$$

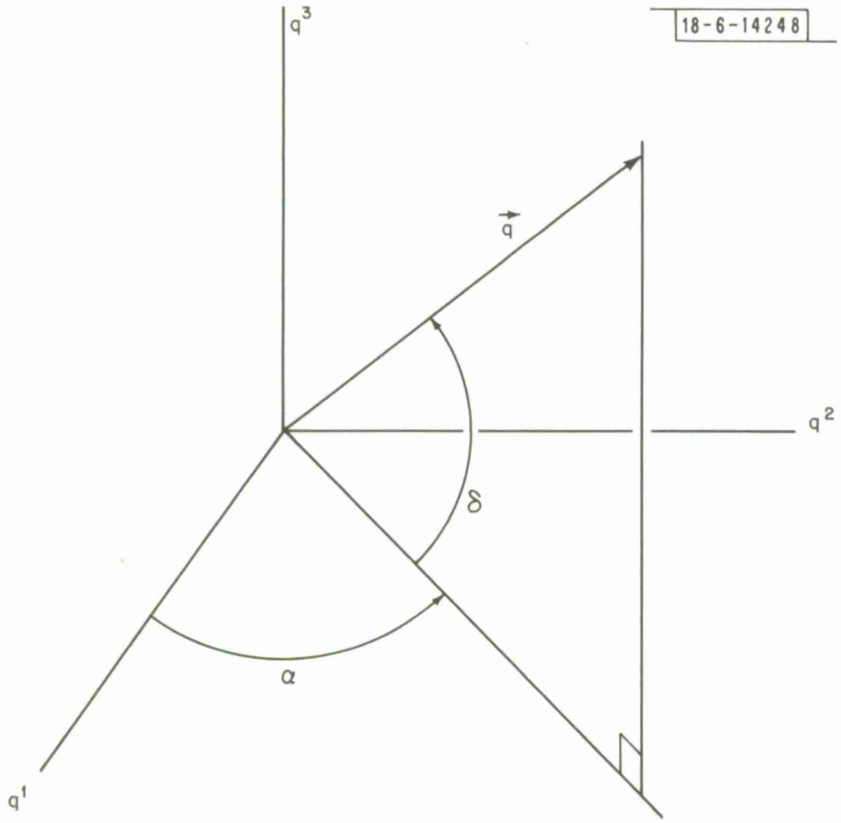

Fig. 8. Right ascension α and declination δ.

In order to remove the quadrant ambiguity in right ascension in the above formula we use

$$\sin\alpha = \frac{q^2}{\sqrt{(q^1)^2 + (q^2)^2}}$$

$$\cos\alpha = \frac{q^1}{\sqrt{(q^1)^2 + (q^2)^2}} \tag{280}$$

Photographic observation biases that are programmed in PEP are equinox-equator biases and a constant declination bias as described in Section VII-D-4 on Meridian Circle Observations. These biases are nicely suited for meridian circle observations given the manner in which such observations are made. However, for photographic observations there is an alternative bias formulation, which we now discuss.

Let $\left(q_*^1, q_*^2, q_*^3\right)$ be the coordinate system in which the right ascension α_* and declination δ_* are actually determined by the observation. Suppose these coordinates are related to the coordinates (q^1, q^2, q^3) by the rigid rotation

$$\begin{pmatrix} q^1 \\ q^2 \\ q^3 \end{pmatrix} = D \begin{pmatrix} q_*^1 \\ q_*^2 \\ q_*^3 \end{pmatrix}, \quad \begin{pmatrix} z_*^1 \\ z_*^2 \\ z_*^3 \end{pmatrix} = D^t \begin{pmatrix} q^1 \\ q^2 \\ q^3 \end{pmatrix} \tag{281}$$

where by Ref. 18, pp. 127-128 the orthogonal matrix D is given approximately by

$$D = \begin{pmatrix} 1 & d\Omega_3 & -d\Omega_2 \\ -d\Omega_3 & 1 & d\Omega_1 \\ d\Omega_2 & -d\Omega_1 & 1 \end{pmatrix} \tag{282}$$

where

$$
\begin{aligned}
d\Omega_1 &= \text{infinitessimal rotation about } q^1 \text{ axis} \\
d\Omega_2 &= \text{infinitessimal rotation about } q^2 \text{ axis} \\
d\Omega_3 &= \text{infinitessimal rotation about } q^3 \text{ axis}
\end{aligned}
\tag{283}
$$

Then to first order in the infinitessimal rotations we have

$$
\begin{aligned}
\delta_* &= \delta + (\sin\alpha\, d\Omega_1 - \cos\alpha\, d\Omega_2) \\
\alpha_* &= \alpha + d\Omega_3 - \tan\delta(\cos\alpha\, d\Omega_1 + \sin\alpha\, d\Omega_2)
\end{aligned}
\tag{284}
$$

VII-D-3. <u>In Satellite Reference Frame</u>

Spacecraft based angular measurements could be of three types: (i) photographic observations against the star background, (ii) look angles in an inertial frame aboard the spacecraft and (iii) look angles in a reference frame fixed in the spacecraft. Photographic observations would be treated exactly as in Section VII-D-2 with the vector $\vec{r}_1$ pointing from the observing body to the observed body. The interpretation of look angle observations depends on the drift of the inertial frame in case (ii) and on the motion of the spacecraft about its center of mass in case (iii). In this section we separate cases (ii) and (iii) as follows:

a. frames which change slowly in inertial space for case (ii) or (iii);

b. approximately earth oriented (or central body oriented) frames which rotate once per orbital revolution for case (iii).

Let (z_*^1, z_*^2, z_*^3) be a reference frame fixed in the satellite. In case (a) let (z^1, z^2, z^3) be the frame referred to the mean equinox and equator of 1950.0 and in case (b) let (z^1, z^2, z^3) be the "ideal" earth oriented frame. We write

$$\begin{pmatrix} z^1 \\ z^2 \\ z^3 \end{pmatrix} = D \begin{pmatrix} z_*^1 \\ z_*^2 \\ z_*^3 \end{pmatrix}, \quad \begin{pmatrix} z_*^1 \\ z_*^2 \\ z_*^3 \end{pmatrix} = D^t \begin{pmatrix} z^1 \\ z^2 \\ z^3 \end{pmatrix} \tag{285}$$

where the orthogonal matrix D is

$$D = \begin{pmatrix} D_{11} & D_{12} & D_{13} \\ D_{21} & D_{22} & D_{23} \\ D_{31} & D_{32} & D_{33} \end{pmatrix} \tag{286}$$

VII-D-3a. Approximately Inertial Frames

The Apollo spacecraft possessed an inertial reference frame specified by gyroscopes. The Mariner spacecraft are sun oriented and so their orientations change slowly in inertial space. In order to represent the transformation (285) explicitly for such spacecraft, let us define the Euler angles (see Fig. 9)

I = angle between z^3 and z_*^3 axes

Ω = angle in (z^1, z^2) plane measured from the z^1 axis to the ascending node of the (z_*^1, z_*^2) plane on the (z^1, z^2) plane (positive towards z^2)

ω = angle in the (z_*^1, z_*^2) plane measured from the ascending node on the (z^1, z^2) plane to the z_*^1 axis

These angles could be given functions of time, or we could have them represented by a Taylor or Fourier series with coefficients to be determined by fitting to data. The variation in the angles can be assumed to be small.

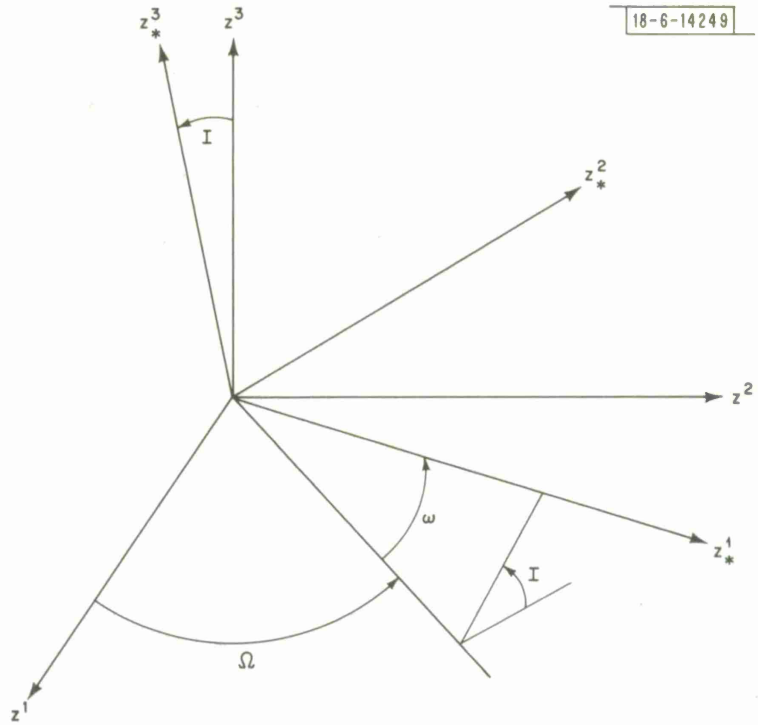

Fig. 9. Euler angles I, Ω, ω relating coordinate systems (z^1, z^2, z^3) and (z_*^1, z_*^2, z_*^3).

By standard Euler angle formulas (see, for example, Ref. 1, pp. 5-6) we have

$$
\begin{aligned}
D_{11} &= \cos\Omega\cos\omega - \sin\Omega\sin\omega\cos I \\
D_{12} &= -\cos\Omega\sin\omega - \sin\Omega\cos\omega\cos I \\
D_{13} &= \sin\Omega\sin I \\
D_{21} &= \sin\Omega\cos\omega + \cos\Omega\sin\omega\cos I \\
D_{22} &= -\sin\Omega\sin\omega + \cos\Omega\cos\omega\cos I \\
D_{23} &= -\cos\Omega\sin I \\
D_{31} &= \sin\omega\sin I \\
D_{32} &= \cos\omega\sin I \\
D_{33} &= \cos I
\end{aligned}
\tag{287}
$$

Let $\vec{q}$ be the vector pointing from the observing spacecraft to the apparent position of the observed body corrected for such effects as aberration. Let (q_*^1, q_*^2, q_*^3) be the components of this vector in the coordinate system fixed in the spacecraft. We define (see Fig. 8)

$$\delta = \text{spacecraft based declination} \qquad (-90^\circ < \delta < 90^\circ)$$

$$= \sin^{-1}\left(\frac{q_*^3}{|\vec{q}|}\right) \tag{288}$$

$$\alpha = \text{spacecraft based right ascension} \qquad (0^\circ < \alpha < 360^\circ)$$

$$= \tan^{-1}\left(\frac{q_*^2}{q_*^1}\right) \tag{289}$$

In order to remove the quadrant ambiguity in right ascension in the above formula we use

$$\sin\alpha = \frac{q_*^2}{\sqrt{(q_*^1)^2 + (q_*^2)^2}} \tag{290}$$

$$\cos\alpha = \frac{}{\sqrt{(q_*^1)^2 + (q_*^2)^2}}$$

VII-D-3b. Approximately Earth Oriented Frames

In analogy with aircraft and ships, consider the following yaw, roll and pitch coordinate system for an earth satellite. The yaw z^3 axis points from the satellite to the center of the earth, the roll z^2 axis lies in the orbital plane normal to the z^3 axis and makes an acute angle with the satellite velocity vector, and the pitch z^1 axis is normal to the orbital plane and completes the right hand system. Let $\vec{x}_{1e}$ be the vector position of the observing satellite relative to the earth at receive time t_1 and let

$\vec{E}_1, \vec{E}_2, \vec{E}_3$ be the unit vectors in the z^1, z^2, z^3 directions. We have

$$\vec{E}_3 = -\frac{\vec{x}_{1e}}{|\vec{x}_{1e}|} \qquad \text{yaw}$$

$$\vec{E}_1 = \frac{\vec{x}_{1e} \times \dot{\vec{x}}_{1e}}{|\vec{x}_{1e} \times \dot{\vec{x}}_{1e}|} \qquad \text{pitch} \tag{291}$$

$$\vec{E}_2 = \vec{E}_3 \times \vec{E}_1 \qquad \text{roll}$$

Let (z_*^1, z_*^2, z_*^3) be a reference frame fixed in the satellite. For an earth oriented satellite such as LES-8 or LES-9, the (z_*^1, z_*^2, z_*^3) frame deviates only slightly from the "ideal" (z^1, z^2, z^3) frame. On LES-8/9 the attitude control system automatically keeps this orientation within $0\overset{\circ}{.}1$ rotation about yaw and roll, and within $0\overset{\circ}{.}6$ in rotation about pitch using sensor look angles to control thruster firings and a momentum wheel. In order to use the satellite based look angles for orbit fitting with the inherent accuracy provided by the sensors and antennas which generate them we must model the orientation error with parameters to be adjusted during the orbit fit.

The transformation between the "ideal" frame (z^1, z^2, z^3) and the one fixed in the satellite (z_*^1, z_*^2, z_*^3) is given by (285). Since we shall be dealing with small deviations we shall not use the Euler angles of Fig. 9 which become degenerate in this case, but we shall rather employ the quantities

$$\begin{aligned} P &= \sin \Omega \sin I \\ Q &= \cos \Omega \sin I \\ \varpi &= \Omega + \omega \end{aligned} \tag{292}$$

In terms of these quantities (287) becomes

$$D_{11} = \cos\tilde{\omega} + P(Q\sin\tilde{\omega} - P\cos\tilde{\omega})\,\frac{1-\sqrt{1-(P^2+Q^2)}}{P^2+Q^2}$$

$$D_{12} = -\sin\tilde{\omega} + P(P\sin\tilde{\omega} + Q\cos\tilde{\omega})\,\frac{1-\sqrt{1-(P^2+Q^2)}}{P^2+Q^2}$$

$$D_{13} = P$$

$$D_{21} = \sin\tilde{\omega} - Q(Q\sin\tilde{\omega} - P\cos\tilde{\omega})\,\frac{1-\sqrt{1-(P^2+Q^2)}}{P^2+Q^2}$$

$$D_{22} = \cos\tilde{\omega} - Q(P\sin\tilde{\omega} + Q\cos\tilde{\omega})\,\frac{1-\sqrt{1-(P^2+Q^2)}}{P^2+Q^2}$$

$$D_{23} = -Q$$

$$D_{31} = Q\sin\tilde{\omega} - P\cos\tilde{\omega}$$

$$D_{32} = P\sin\tilde{\omega} + Q\cos\tilde{\omega}$$

$$D_{33} = \sqrt{1-(P^2+Q^2)} \tag{293}$$

The parametrization of P, Q, $\tilde{\omega}$ as functions of time depends on the characteristics of the attitude control system and the period of time over which the data are being fitted. As a first guess we might suppose that

$$P = \sum_{j=o}^{n} P_j(t_1 - t_o)^j + \sum_{j=1}^{m}\left[P_{js}\sin\left(\frac{2\pi\, m(t_1 - t_o)}{T}\right) + P_{jc}\cos\left(\frac{2\pi\, m(t_1 - t_o)}{T}\right)\right] \tag{294}$$

with similar expressions for Q and $\tilde{\omega}$, where t_1 is the receive time epoch of a given observation, where t_o is an epoch in the midst of the look angle data to which we are fitting, where T is the orbital period of the satellite or some multiple of it, and where the numbers m, n of coefficients that are solved for depends on what the data allow. There could be periodic variations because of the eccentricity of the satellite's orbit and solar heating, among other reasons.

The most sophisticated procedure for solving for the satellite orientation error along with the other parameters, such as the initial conditions of the equations of motion relative to the earth, would be to numerically integrate the equations for the motion of the satellite about its center of mass along with the equations of its motion relative to the earth, and solve for both sets of initial conditions in fitting to data. However, the equations for the motion about the center of mass would be complicated by thruster firing and momentum wheel spin-up. An ad-hoc parametrization is probably a better technique to follow in this case, especially if a reasonable model can be decided upon, either from a priori considerations or from the actual observed behavior of the attitude control system.

Let $(z_{\#}^1, z_{\#}^2, z_{\#}^3)$ be the reference frame belonging to a specific sensor or antenna on the satellite. The deviation of the $(z_{\#}^1, z_{\#}^2, z_{\#}^3)$ frame from the (z_*^1, z_*^2, z_*^3) frame will be very small, so by Ref. 18, pp. 127-128, we can write

$$\begin{pmatrix} z_*^1 \\ z_*^2 \\ z_*^3 \end{pmatrix} = D_{\#} \begin{pmatrix} z_{\#}^1 \\ z_{\#}^2 \\ z_{\#}^3 \end{pmatrix}, \quad \begin{pmatrix} z_{\#}^1 \\ z_{\#}^2 \\ z_{\#}^3 \end{pmatrix} = D_{\#}^t \begin{pmatrix} z_*^1 \\ z_*^2 \\ z_*^3 \end{pmatrix} \tag{295}$$

$$D_{\#}^t = \begin{pmatrix} 1 & d\Omega_3 & -d\Omega_2 \\ -d\Omega_3 & 1 & d\Omega_1 \\ d\Omega_2 & -d\Omega_1 & 1 \end{pmatrix} \tag{296}$$

$$
\begin{aligned}
d\Omega_1 &= \text{infinitesimal rotation about pitch } z_*^1 \text{ axis} \\
d\Omega_2 &= \text{infinitesimal rotation about roll } z_*^2 \text{ axis} \qquad (297) \\
d\Omega_3 &= \text{infinitesimal rotation about yaw } z_*^3 \text{ axis}
\end{aligned}
$$

This expression for the orthogonal matrix $D_{\#}$ is valid only insofar as we can ignore products of the errors $(d\Omega_1, d\Omega_2, d\Omega_3)$ in pitch, roll and yaw. We could not use the same type formula for D because on LES-8/9 the sensor and antenna pointing inaccuracies could be smaller than the square of the orientation error.

Let $\vec{E}_1^*, \vec{E}_2^*, \vec{E}_3^*$ be the unit vectors in the z_*^1, z_*^2, z_*^3 direction and let $\vec{E}_1^{\#}, \vec{E}_2^{\#}, \vec{E}_3^{\#}$ be the unit vectors in the $z_{\#}^1$, $z_{\#}^2$, $z_{\#}^3$ directions. By (285) and (286) we have

$$
\vec{E}_k^* = \sum_{j=1}^{3} D_{jk} \vec{E}_j \qquad k = 1, 2, 3 \qquad (298)
$$

and by (295) and (296) we have

$$
\begin{aligned}
\vec{E}_1^{\#} &= \vec{E}_1^* + (d\Omega_3 \vec{E}_2^* - d\Omega_2 E_3^*) \\
\vec{E}_2^{\#} &= \vec{E}_2^* + (-d\Omega_3 \vec{E}_1^* + d\Omega_1 \vec{E}_3^*) \qquad (299) \\
\vec{E}_3^{\#} &= \vec{E}_3^* + (d\Omega_2 \vec{E}_1^* - d\Omega_1 \vec{E}_2^*)
\end{aligned}
$$

Let $\vec{q}$ be a vector pointing from the observing satellite to the observed object corrected for light time and aberration as in (259). Referring

to Fig. 10 we define

$$\alpha_{\#} = \text{pitch angle} \quad (-180^{\circ} < \alpha_{\#} \leq 180^{\circ})$$

$$= \text{angle between the projection of } \vec{q} \text{ on the } (z^3_{\#}, z^2_{\#}) \text{ plane and the } z^3_{\#} \text{ axis measured positive towards the } z^2_{\#} \text{ axis}$$

$$\delta_{\#} = \text{roll angle} \quad (-90^{\circ} \leq \delta \leq 90^{\circ})$$

$$= 90^{\circ} - \text{angle between } \vec{q} \text{ and the } z^1_{\#} \text{ axis}$$

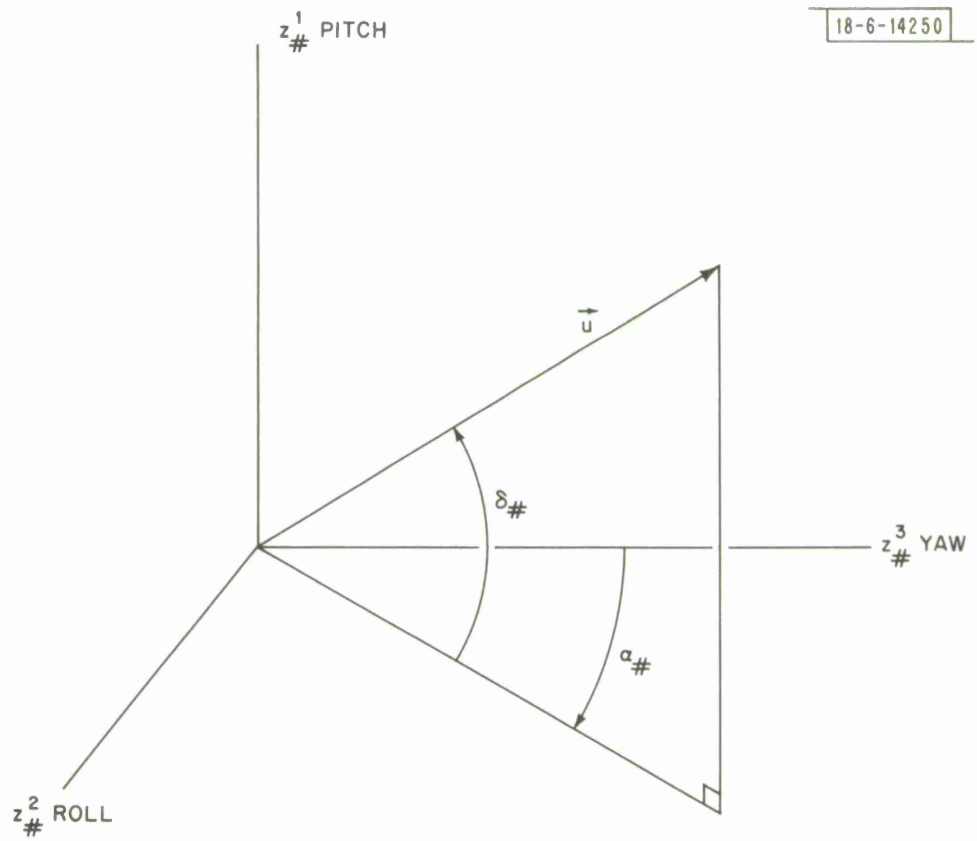

Fig. 10. Pitch and roll angles $\alpha_{\#}$, $\delta_{\#}$ in the coordinate system $(z^1_{\#}, z^2_{\#}, z^3_{\#})$ fixed in the observing satellite.

with similar definitions for the angles α_*, δ_* . In terms the unit vectors $\vec{E}_1^{\#}$, $\vec{E}_2^{\#}$, $\vec{E}_3^{\#}$ in the $z_{\#}^1$, $z_{\#}^2$, $z_{\#}^3$ coordinate directions we have

$$\delta_{\#} = \sin^{-1}\left(\frac{\vec{q} \cdot \vec{E}_1^{\#}}{|\vec{q}|}\right) \tag{300}$$

$$\alpha_{\#} = \tan^{-1}\left(\frac{\vec{q} \cdot \vec{E}_2^{\#}}{\vec{q} \cdot \vec{E}_3^{\#}}\right) \tag{301}$$

In order to remove the quadrant ambiguity in $\alpha_{\#}$ we use

$$\begin{aligned} \sin \alpha_{\#} &= \frac{\vec{q} \cdot \vec{E}_2^{\#}}{\sqrt{(\vec{q} \cdot \vec{E}_2^{\#})^2 + (\vec{q} \cdot \vec{E}_3^{\#})^2}} \\ \cos \alpha_{\#} &= \frac{\vec{q} \cdot \vec{E}_3^{\#}}{\sqrt{(\vec{q} \cdot \vec{E}_2^{\#})^2 + (\vec{q} \cdot \vec{E}_3^{\#})^2}} \end{aligned} \tag{302}$$

Inserting (299) in the above equations for $\delta_{\#}$, $\alpha_{\#}$, making Taylor expansions and ignoring powers and products higher than the first in the small orientation errors $d\Omega_1$, $d\Omega_2$, $d\Omega_3$ we obtain

$$\begin{aligned} \delta_{\#} &= \delta_* + (\sin \alpha_* \, d\Omega_3 - \cos \alpha_* \, d\Omega_2) \\ \alpha_{\#} &= \alpha_* + d\Omega_3 - \tan \delta_* (\cos \alpha_* \, d\Omega_3 + \sin \alpha_* \, d\Omega_2) \end{aligned} \tag{303}$$

In fitting to data we shall solve for the orientation error of the whole satellite represented by the matrix D and for the orientation error in each sensor or antenna represented by the angles $(d\Omega_1, d\Omega_2, d\Omega_3)$. For a sensor which has

α_* vary by a considerable amount during the period of an orbit fit we can separate the effects of $d\Omega_1$, $d\Omega_2$ and $d\Omega_3$. For a sensor which has α_*, δ_* being fairly constant during the period of an orbit fit we do not have three independent biases, so we shall take

$$\begin{aligned} \delta_{\#} &= \delta_* + \Delta\delta \\ \alpha_{\#} &= \alpha_* + \Delta\alpha \end{aligned} \tag{304}$$

for such a sensor. These biases can be functions of time similar to (294) with parameters to be estimated.

The notation conventionally used by engineers for an earth-oriented satellite reference system is different than that used for an astronomical reference system (compare Figs. 8 and 10). There is a complete analogy between the resulting formulas, such as for biases (compare (284) and (303)), but it is best to derive the formulas in the two situations independently of each other.

VII-D-4. Meridian Circle

A meridian or transit circle is a telescope that is constrained to move in elevation only along the meridian through the observing site. A raw observable consists of the time at which an object crosses the meridian and its elevation at that instant. During an observing evening observations are made of the moon, planets and stars. During the day observations are made of the sun and day stars. Raw observations over several years at a given observatory are reduced together to yield published values of geocentric right ascension and declination of the sun, moon and planets at the observing times plus an observational star catalogue.

The clock used in noting the time of meridian transits only needs to retain accuracy during an observing evening and day, since it is the relative times of crossings of the sun, moon, planets and stars that matter. In reducing all the observations to absolute right ascensions a choice of equinox point is made. This point can vary from one observing series extending over several years to another. In the 1700's pendulumn clocks and verbal noting of meridian

crossing were used. Present day techniques are obviously more sophisticated; see Ref. 26. However, the fundamental idea of a telescope fixed to move in the meridian has not changed since the 1700's and there has been only about an order of magnitude improvement in accuracy. The introduction of the telescope gave a 2 order of magnitude improvement in accuracy over the meridian crossing observations with the naked eye made by Tycho Brahe, whose basic techniques went back to the ancient Greeks and Egyptians.

The published right ascension and declination referred to the true equinox and equator of date at the instant of meridian crossing have usually been corrected to the center of earth with diurnal aberration and atmospheric refraction removed. Observations of the limbs of the sun, moon and planets have been corrected to the center, except for some old observations. Modern observations have the effect of wobble removed.

To calculate the theoretical value of the geocentric right ascension α and declination δ referred to the true equinox and equator of date at the instant of meridian crossing at an observatory, we need to know the west longitude θ of the observatory. Given a first guess at the UT1 time of meridian crossing (which must be within 12 hours of the true time of crossing), we calculate the true Greenwich sidereal time Θ using the formulas in Section IV-B. The local sidereal time is $\Theta - \theta$. Using the value of coordinate time CT corresponding to UT1, we calculate the vector $\vec{r}_1$ pointing from the center of the earth at time CT to the observed body at retarded time as explained at the start of Section VII-D. We make the general relativity bending of light correction if accuracy warrants. We make the aberration correction for the velocity of the center of the earth relative to the sun for sun and planet observations (relative to the center of mass of the solar system for star observations). For geocentric moon observations no aberration correction is necessary as explained at the start of Section VII-D. Having applied these corrections to the vector $\vec{r}_1$ to obtain the vector $\vec{q}$ in a coordinate system referred to the mean equinox and equator of 1950.0, we transform coordinates using the nutation-precession NP to obtain a vector $\vec{w}$ with components in a coordinate system referred to the true equinox and equator of date:

$$w^k = \sum_{\ell=1}^{3} (NP)_{k\ell}\, q^{\ell} \quad , \qquad k = 1, 2, 3 \tag{305}$$

We calculate

$$\delta = \sin^{-1}\left(\frac{w^3}{|\vec{w}|}\right) \tag{306}$$

$$\alpha = \tan^{-1}\left(\frac{w^2}{w^1}\right) \tag{307}$$

Quadrant ambiguity in α is removed by

$$\begin{aligned} \sin\alpha &= \frac{w^2}{\sqrt{(w^1)^2 + (w^2)^2}} \\ \cos\alpha &= \frac{w^1}{\sqrt{(w^1)^2 + (w^2)^2}} \end{aligned} \tag{308}$$

At meridian crossing the right ascension is equal to the local sidereal time. We correct the UT1 time of observation by

$$\Delta t = (\Theta - \theta) - \alpha \tag{309}$$

and redo the above calculations, continuing the iteration until Δt is less than some input accuracy constant.

Specifying the time of the observations as the instant of meridian crossing is essentially using the rotating earth as a clock. In fitting to data extending back in time we not only have to solve for the orbits of the various bodies but also for the variations in the rotation of the earth relative to coordinate time using the model in Section III-E.

Suppose the reference frame (w_*^1, w_*^2, w_*^3) that an observatory uses to calculate right ascension α_* and declination δ_* from a raw observation is related to our coordinate system (w^1, w^2, w^3) referred to the true equinox and equator of date by the rigid rotation

$$\begin{pmatrix} w^1 \\ w^2 \\ w^3 \end{pmatrix} = D \begin{pmatrix} w_*^1 \\ w_*^2 \\ w_*^3 \end{pmatrix}, \quad \begin{pmatrix} w_*^1 \\ w_*^2 \\ w_*^3 \end{pmatrix} = D^t \begin{pmatrix} w^1 \\ w^2 \\ w^3 \end{pmatrix} \tag{310}$$

where the orthogonal matrix D is given by (286) and (287) in terms of Euler angles I, Ω, ω. These bias angles are small and thus nearly degenerate, but they seem appropriate to use given the manner in which each observatory chooses an equinox point for reducing its raw observations to absolute right ascensions and declinations.

If we can ignore the squares of the small angles I, Ω, ω, equations (287) for the transformation matrix D become

$$\begin{aligned} D_{11} &= 1 \\ D_{12} &= -\ (\Omega + \omega) \\ D_{13} &= 0 \\ D_{21} &= (\Omega + \omega) \\ D_{22} &= 1 \\ D_{23} &= -\ I \\ D_{31} &= 0 \\ D_{32} &= I \\ D_{33} &= 1 \end{aligned} \tag{311}$$

We then have that

$$\begin{aligned} \delta_* &= \delta - I \sin \alpha \\ \alpha_* &= \alpha - (\Omega + \omega) + I \tan \delta \cos \alpha \end{aligned} \tag{312}$$

Changing notation, let $\Delta\alpha = -(\Omega + \omega)$ be the equinox correction, let $\Delta\phi = -I$ be the equator correction and let $\Delta\delta$ be a constant bias in declination. Then we could write

$$\begin{aligned} \delta_* &= \delta + \Delta\phi \sin \alpha + \Delta\delta \\ \alpha_* &= \alpha + \Delta\alpha - \Delta\phi \tan \delta \cos \alpha \end{aligned} \tag{313}$$

These are the biases that are programmed in PEP in lieu of comparing the observational star catalogue of each observation series with the FK4 star catalogue. This latter procedure would have the virtue of correcting for biases in each portion of the sky instead of having biases which rigidly apply over the whole sky. The constant bias in declination $\Delta\delta$ could absorb many errors made by an observatory in reducing an elevation observation to a geocentric declination, since the observed object is always over the meridian of the observatory. The constant bias in right ascension $\Delta\alpha$ would absorb errors in the assumed longitude of an observatory and the choice of equinox point.

For a sun, moon or planet observation the limbs are observed crossing the meridian and a correction made to obtain the right ascension and declination of the center at meridian crossing. Let $\overrightarrow{\Delta\rho}$ be the vector from the true position of the center of the observed body to the point at which the observatory thinks is the center. For a planet or moon observation, we can imagine that this displacement $\overrightarrow{\Delta\rho}$ is a function of the illuminated phase of the observed body as seen from the earth. Let $\vec{x}_{ps}$ be the vector from the sun to the observed body and let $\vec{x}_{es}$ be the vector from the sun to the earth. We then assume that

$$\vec{\Delta\rho} = \rho \sum_{n=o}^{N} a_n \cos n\phi \frac{(\vec{x}_{ps} \times \vec{x}_{es}) \times (\vec{x}_{es} - \vec{x}_{ps})}{|\vec{x}_{ps} \times \vec{x}_{es}| \, |\vec{x}_{es} - \vec{x}_{ps}|} \tag{314}$$

where ρ is the angular diameter of the observed body at unit distance, where the phase angle ϕ is given by

$$\phi = \cos^{-1} \left[\frac{\vec{x}_{ps} \cdot (\vec{x}_{ps} - \vec{x}_{es})}{|\vec{x}_{ps}| \, |\vec{x}_{ps} - \vec{x}_{es}|} \right] \quad 0 \leq \phi \leq \pi \tag{315}$$

and where the coefficients a_n are to be determined by fitting to data.

In PEP the vector $\vec{w}$ is replaced by $\vec{w} + \vec{\Delta\rho}$ before calculating the right ascension and declination using formula (308). Of course, $\vec{\Delta\rho}$ has to be rotated to the coordinate system referred to the true equinox and equator of date before adding to $\vec{w}$.

The above formulation of equinox-equator and phase corrections for meridian circle observations is due to I. I. Shapiro.

VII-E. Long Baseline Interferometer

A radio interferometer observation is the measurement of the difference in time of arrival of an electromagnetic wave at two receiving antennas modulo the time equivalent of n wave lengths. The development of wide band interferometric techniques have allowed the differential time delays to be determined without ambiguity. This section is concerned with the theoretical value of wide band interferometric observables.

The interferometer antennas could be intercontinental distances apart, in which case there is no one clock which could be used by both sites simultaneously. Each site has its own atomic clock keeping UTC time, say, and the received radio energy at each site is recorded on magnetic tape versus the time given by the site clock. The two tapes are then compared to detect the interferometer fringes. The theoretical value of the difference in UTC time of arrival Δt_c of a wave front at the two antennas must be corrected for the difference in the clocks at the two sites to obtain the value Δt_{c*} to be compared with the observation:

$$\Delta t_{c*} = \Delta t_c + a_o + a_1(t - t_o) \tag{316}$$

where a_o is the constant offset between the two clocks at some arbitrary epoch t_o and where a_1 is the linear drift between the two clocks. The coefficients a_o and a_1 are to be determined by fitting to data. By (47) the relation between the UTC differential delay Δt_c and the Al atomic time differential delay Δt_a is

$$\Delta t_c = (1 - \text{fractional frequency offset})\Delta t_a \tag{317}$$

After 1.0 January 1972 we have $\Delta t_c = \Delta t_a$.

Suppose that the radio wave arrives from a distant source external to the solar system (quasar), and that the unit vector pointing from the center of mass of the solar system to the source is $\vec{x}_{po}$,

$$\vec{x}_{po} = (\cos\lambda \cos\eta)\,\vec{\varepsilon}_1 + (\sin\lambda \cos\eta)\,\vec{\varepsilon}_2 + \sin\eta\,\vec{\varepsilon}_3 \tag{318}$$

where λ, η are the right ascension and declination of the point radio source referred to the mean equinox and equator of 1950.0. We might have

$$\lambda = \lambda_o + \lambda_1(t - t_o)$$

$$\eta = \eta_o + \eta_1(t - t_o) \tag{319}$$

where λ_o, η_o are the right ascension and declination of the point source at some arbitrary epoch t_o and where λ_1, η_1 are the proper motions in right ascension and declination. We assume that the distance R of the source from the solar system is so great that the electromagnetic wave that arrives at the two interferometer antennas is essentially a plane wave.

In Fig. 11 a plane wave arrives from a direction $\vec{x}_{po}$ at two observing sites which have coordinates $\vec{x}_{1e}$, $\vec{x}_{2e}$ relative to the center of the earth. We shall do all our calculations in the coordinate system with origin at the center of mass of the solar system referred to the mean equinox and equator of 1950.0 using the vectors

$$\vec{x}_{io} = \vec{x}_{ie} + \vec{x}_{eo} \quad , \quad i = 1,2 \tag{320}$$

where $\vec{x}_{eo}$ is given by

$$\vec{x}_{eo} = \vec{x}_{cs} - \frac{M_m}{M_c}\vec{x}_{me} + \vec{x}_{so} \tag{321}$$

The difference Δt in coordinate time of arrival of a plane wave from the source at the two sites is

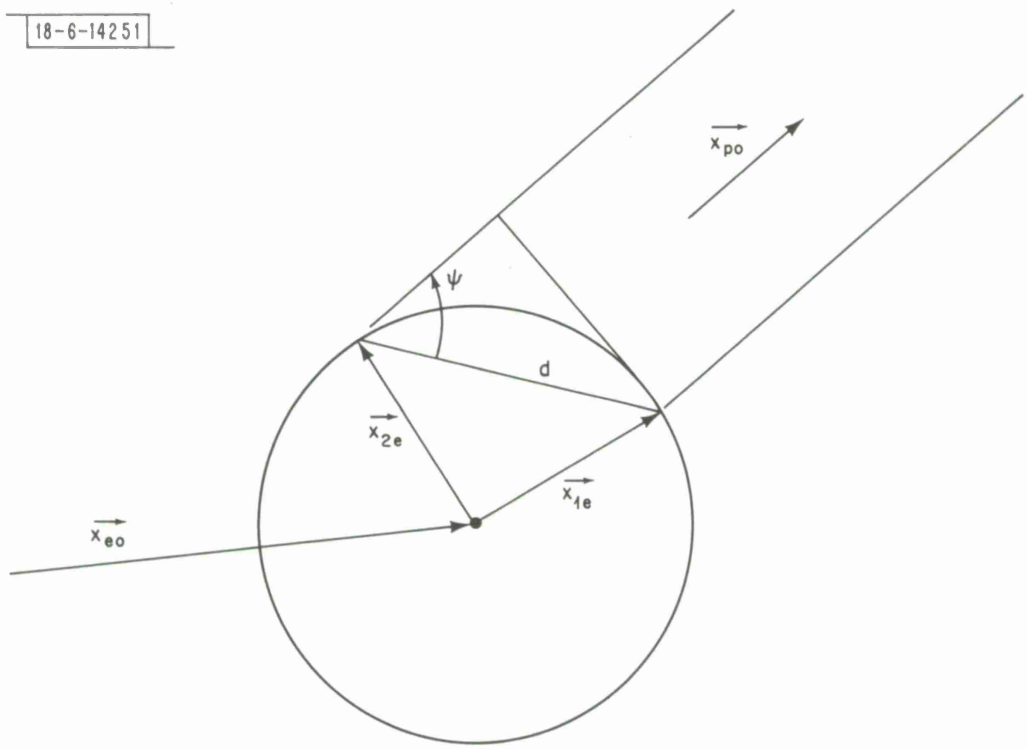

Fig. 11. Plane wave arriving at interferometer observing sites.

$$\Delta t = d \cos \psi$$

$$\vec{d} = \vec{x}_{20}(t_2) - \vec{x}_{10}(t_1)$$

$$d = |\vec{d}| \tag{322}$$

$$\cos \psi = - \frac{\vec{x}_{po} \cdot \vec{d}}{d}$$

where the distance unit is the light second and where t_1 and t_2 are the coordinate times of arrival of the plane wave at sites $\vec{x}_{1e}$ and $\vec{x}_{2e}$, respectively, with

$$t_2 = t_1 - \Delta t \tag{323}$$

Given the time of reception t_1 at the first site, we make a first guess at the value of Δt. Using the resulting value of t_2 we calculate a new value of Δt, then a new value of t_2, etc. We continue the iteration until the change in the value of Δt is less than some input accuracy constant.

The atomic time differential delay Δt_a is related to the coordinate time differential delay Δt by

$$\Delta t_a = \Delta t + (CT - Al)_2 - (CT - Al)_1 \tag{324}$$

where $(CT - Al)_i$ is the difference between coordinate time and Al atomic time at site i at time t_i $(i = 1,2)$. Times t_i are so close together that $(CT - Al)_1$ and $(CT - Al)_2$ can be considered identical except for the part due to the velocity or rotation of the earth, which has a different direction at the two sites even if t_1 and t_2 were identical.

Let us define

$\vec{v}_{ie} = \dot{\vec{x}}_{ie}$ = velocity of site i relative to center of mass of earth

$\vec{v}_{eo}$ = velocity of earth relative to center of mass of solar system

$$\vec{v}_i = \vec{v}_{ie} + \vec{v}_{eo}$$

Writing Al instead of AT, we have by (36)

$$(CT - Al)_i = (CT - Al)_o + \frac{1}{1 + \frac{U_o}{c^2} - \frac{1}{2}\frac{v_o^2}{c^2}} \int_{t_o}^{t_i} \left[\left(\frac{U_i}{c^2} - \frac{U_o}{c^2}\right) - \frac{1}{2}\left(\frac{v_i^2}{c^2} - \frac{v_o^2}{c^2}\right)\right] dt \tag{325}$$

where U_i, v_i are the gravitational potential and velocity at site i at time t_i $(i = 1,2)$, where U_o, v_o are the average values of the gravitational potential and velocity at the center of the earth, where c is the velocity of light, and where $(CT - Al)_o$ is the value of coordinate time minus atomic time at some reference epoch t_o. We therefore have

$$(CT - Al)_2 - (CT - Al)_1 = \frac{1}{1 + \frac{U_o}{c^2} - \frac{1}{2}\frac{v_o^2}{c^2}} \left\{ \int_{t_o}^{t_1} \left[\left(\frac{U_2}{c^2} - \frac{U_1}{c^2}\right) - \frac{1}{2}\left(\frac{v_2^2}{c^2} - \frac{v_1^2}{c^2}\right)\right] dt - \int_{t_1}^{t_2} \left[\left(\frac{U_2}{c^2} - \frac{U_o}{c^2}\right) - \frac{1}{2}\left(\frac{v_2^2}{c^2} - \frac{v_o^2}{c^2}\right)\right] dt \right\} \tag{326}$$

Since

$$|t_2 - t_1| \lesssim 10^{-2} \text{ sec}$$

$$\left|\frac{U_2}{c^2} - \frac{U_o}{c^2}\right| \approx \frac{1}{2}\left|\frac{v_2^{\,2}}{c^2} - \frac{v_o^{\,2}}{c^2}\right| \lesssim 3 \times 10^{-10}$$

we can ignore the second integral from t_1 to t_2 in (326). Since U_o/c^2 and $v_o^{\,2}/c^2$ are about 10^{-8} in magnitude, we can ignore them relative to 1, so that

$$(CT - A1)_2 - (CT - A1)_1 = \int_{t_o}^{t_1} \left[\left(\frac{U_2}{c^2} - \frac{U_1}{c^2}\right) - \frac{1}{2}\left(\frac{v_2^{\,2}}{c^2} - \frac{v_1^{\,2}}{c^2}\right)\right] dt \qquad (327)$$

The integral (327) will give a diurnal discrepancy between the readings of the atomic clocks at the two sites. In order to see this more explicitly, we need only consider the gravitational potentials of the earth and sun. For $\alpha = e, s,$ let

γ = gravitational constant

M_α = mass of body α

$\rho_{i\alpha}$ = distance of site i from body α $(i = 1,2)$
= $|\vec{x}_{i\alpha}|$

J_2 = second harmonic of earth's gravitational potential

Then by (327) we obtain

$$(CT - A1)_2 - (CT - A1)_1 = \int_{t_o}^{t_1} \left[- \frac{\gamma M_s}{c^2} \left(\frac{1}{\rho_{2s}} - \frac{1}{\rho_{1s}} \right) \right.$$

$$\left. - \frac{\gamma M_e}{c^2} \left(\frac{1}{\rho_{2e}} - \frac{J_2}{\rho_{2e}^3} - \frac{1}{\rho_{1e}} + \frac{J_2}{\rho_{1e}^3} \right) - \frac{1}{2} \left(\frac{v_2^{\,2}}{c^2} - \frac{v_1^{\,2}}{c^2} \right) \right] dt$$

$$= \int_{t_o}^{t_1} \left\{ - \frac{\gamma M_s}{c^2 |\vec{x}_{es}|} \left[\frac{1}{\left(1 + 2 \frac{\vec{x}_{2e} \cdot \vec{x}_{es}}{|\vec{x}_{es}|^2} + \frac{|\vec{x}_{2e}|^2}{|\vec{x}_{es}|^2} \right)^{1/2}} \right. \right.$$

$$\left. - \frac{1}{\left(1 + 2 \frac{\vec{x}_{1e} \cdot \vec{x}_{es}}{|\vec{x}_{es}|^2} + \frac{|\vec{x}_{1e}|^2}{|\vec{x}_{es}|^2} \right)^{1/2}} \right]$$

$$- \frac{\gamma M_e}{c^2} \left(\frac{1}{|\vec{x}_{2e}|} - \frac{J_2}{|\vec{x}_{2e}|^3} - \frac{1}{|\vec{x}_{1e}|} + \frac{J_2}{|\vec{x}_{1e}|^2} \right)$$

$$\left. - \frac{1}{2} \left(\frac{|\vec{v}_{2e} + \vec{v}_{es}|^2}{c^2} - \frac{|\vec{v}_{1e} + \vec{v}_{es}|^2}{c^2} \right) \right\} dt \qquad (328)$$

Now by Ref. 20, pp. 83-86, we have

$$\frac{1}{\sqrt{1 - 2qu + u^2}} = \sum_{n=o}^{\infty} P_n(q)\, u^n \tag{329}$$

where the first few Legendre polynomials P_n are

$$P_o(q) = 1,\ P_1(q) = q,\ P_2(q) = \frac{3}{2} q^2 - \frac{1}{2}$$

$$P_3(q) = \frac{5}{2} q^3 - \frac{3}{2} q,\quad P_4(q) = \frac{35}{8} q^4 - \frac{15}{4} q^2 + \frac{3}{8} \tag{330}$$

Applying this formula with $n = o,1$ to (328) with

$$u = \frac{|\vec{x}_{ie}|}{|\vec{x}_{es}|}$$

$$q = \frac{\vec{x}_{ie} \cdot \vec{x}_{es}}{|\vec{x}_{ie}|\ |\vec{x}_{es}|}$$

we obtain

$$\begin{aligned}(CT - A1)_2 - (CT - A1)_1 = {} & \frac{1}{c^2} \int_{t_o}^{t_1} \left[\frac{\gamma M_s}{|\vec{x}_{es}|^3} (\vec{x}_{2e} - \vec{x}_{1e}) \cdot \vec{x}_{es} \right. \\ & \left. - (\vec{v}_{2e} - \vec{v}_{1e}) \cdot \vec{v}_{es} \right] dt \\ & + \frac{1}{c^2} \int_{t_o}^{t_1} \left[\left(- \frac{\gamma M_e}{|\vec{x}_{2e}|} + \frac{\gamma M_e J_2}{|\vec{x}_{2e}|^3} - \frac{|\vec{v}_{2e}|^2}{2} \right) \right. \\ & \left. - \left(- \frac{\gamma M_e}{|\vec{x}_{1e}|} + \frac{\gamma M_e J_2}{|\vec{x}_{1e}|^3} - \frac{|\vec{v}_{1e}|^2}{2} \right) \right] dt \end{aligned} \tag{331}$$

The second integrand is essentially a constant, and hence can be ignored, since any linear drift between the two clocks would be absorbed in the determination of the parameter a_1 in (316). Besides, this constant drift is almost exactly 0, because the sea leavel surface of the earth near which observing sites i lie is such that

$$-\frac{\gamma M_e}{|\vec{x}_{ie}|} + \frac{\gamma M_e J_2}{|\vec{x}_{ie}|^3} - \frac{|\vec{v}_{ie}|^2}{2} = \text{constant independent of latitude and longitude} \tag{332}$$

In the coordinate system referred to the true equinox and equator of date we have

$$\begin{aligned} x^1_{ie} &= \rho_i \cos(\Theta - \theta_i) \cos\phi_i \\ x^2_{ie} &= \rho_i \sin(\Theta - \theta_i) \cos\phi_i \\ x^3_{ie} &= \rho_i \sin\phi_i \end{aligned} \tag{333}$$

where $(\rho_i, \theta_i, \phi_i)$ are the radius, west longitude and north latitude of site i and where Θ is the true sidereal time. The velocity of the site is

$$\begin{aligned} v^1_{ie} &= -\rho_i \sin(\Theta - \theta_i) \cos\phi_i \frac{d\Theta}{dt} \\ v^2_{ie} &= \rho_i \cos(\Theta - \theta_i) \cos\phi_i \frac{d\Theta}{dt} \\ v^3_{ie} &= 0 \end{aligned} \tag{334}$$

We take the coordinates of the earth relative to the sun $(x^1_{es}, x^2_{es}, x^3_{es}, v^1_{es}, v^2_{es}, v^3_{es})$ to be referred to the true equinox and equator of date, or alternately, we could take them referred to the mean equinox and equator of 1950.0 since the difference between these reference systems in the 1970s is ignorable in this calculation (about 1/3 of a degree). Then by (331) through (334) we have

$$
\begin{aligned}
(CT - A1)_2 - (CT - A1)_1 = \frac{1}{c^2}\int_{t_o}^{t_1} \Bigg\{ & \frac{\gamma M_s}{|x_{es}|^3} \Big[x^1_{es} \Big(\rho_2 \cos(\Theta - \theta_2) \cos \phi_2 - \rho_1 \cos(\Theta - \theta_1) \cos \phi_1 \Big) \\
& + x^2_{es} \Big(\rho_2 \sin(\Theta - \theta_2) \cos \phi_2 - \rho_1 \sin(\Theta - \theta_1) \cos \phi_1 \Big) \\
& + x^3_{es} \Big(\rho_2 \sin \phi_2 - \rho_1 \sin \phi_1 \Big) \Big] \\
& + v^1_{es} \Big(\rho_2 \sin(\Theta - \theta_2) \cos \phi_2 - \rho_1 \sin(\Theta - \theta_1) \cos \phi_1 \Big) \frac{d\Theta}{dt} \\
& - v^2_{es} \Big(\rho_2 \cos(\Theta - \theta_2) \cos \phi_2 - \rho_1 \sin(\Theta - \theta_1) \cos \phi_1 \Big) \frac{d\Theta}{dt} \Bigg\} dt
\end{aligned}
$$

$$
= \frac{\gamma M_s}{c^2}\int_{t_o}^{t_1} \frac{x^3_{es}}{|x_{es}|^3} (\rho_2 \sin \phi_2 - \rho_1 \sin \phi_1)\, dt
$$

$$
+ \frac{1}{c^2\, d\Theta/dt}\int_{\Theta(t_o)}^{\Theta(t_1)} \Bigg\{ \frac{\gamma M_s}{|\vec{x}_{es}|^3} \Big[x^1_{es} \Big(\rho_2 \cos(\Theta - \theta_2) \cos \phi_2
$$

$$- \rho_1 \cos(\Theta - \theta_1) \cos \phi_1\Big) + x^2_{es} \Big(\rho_2 \sin(\Theta - \theta_2) \cos \phi_2$$

$$- \rho_1 \sin(\Theta - \theta_1) \cos \phi_1\Big)\Big]$$

$$+ v^1_{es} \left[\rho_2 \sin(\Theta - \theta_2) \cos \phi_2 - \rho_1 \sin(\Theta - \theta_1) \cos \phi_1\right] \frac{d\Theta}{dt}$$

$$- v^2_{es} \left[\rho_2 \cos(\Theta - \theta_2) \cos \phi_2 - \rho_1 \sin(\Theta - \theta_1) \cos \phi_1\right] \frac{d\Theta}{dt}\Bigg\} d\Theta \qquad (335)$$

Suppose we were processing observations extending over a day and that we could assume that $\vec{x}_{es}$ and $\vec{v}_{es}$ were constant vectors. Then the linear drift term given by the first integral in (335) could be absorbed in the solution for a_1 in (316) so that

$$(CT - Al)_2 - (CT - Al)_1 = \frac{1}{c^2\, d\Theta/dt} \Bigg\{ \frac{\gamma M_s}{|\vec{x}_{es}|^3}$$

$$\Big[x^1_{es} \Big(\rho_2 \sin(\Theta - \theta_2) \cos \phi_2 - \rho_1 \sin(\Theta - \theta_1) \cos \phi_1\Big)$$

$$- x^2_{es} \Big(\rho_2 \cos(\Theta - \theta_2) \cos \phi_2 - \rho_1 \cos(\Theta - \theta_1) \cos \phi_1\Big)\Big]$$

$$- v^1_{es} \left[\rho_2 \cos(\Theta - \theta_2) \cos \phi_2 - \rho_1 \cos(\Theta - \theta_1) \cos \phi_1\right] \frac{d\Theta}{dt}$$

$$- v^2_{es} \left[\rho_2 \sin(\Theta - \theta_2) \cos \phi_2 - \rho_1 \sin(\Theta - \theta_1) \cos \phi_1\right] \frac{d\Theta}{dt} \Bigg\} \Bigg|_{\Theta=\Theta(t_o)}^{\Theta=\Theta(t_1)}$$

(336)

The epoch t_o could be taken as any time within the day in question, say at 0^h beginning of day. The difference between the results obtained with different choices of epoch would be absorbed in the solution for a_o in (316) when fitting to data. The amplitude of the diurnal effect given by (336) is about a microsecond. It is thus very important to make correction (324) to the theoretical value of the differential delay, which can have sub-nanosecond accuracy. However, the specification of epochs for determining positions of bodies can still use the value of CT − A1 given by (41) or Table I, which ignore the effect of the rotation of the earth on clock rates.

Another interferometer observable besides differential delay Δt_{c*} is differential delay rate $\Delta \dot{t}_{c*}$. Let t_c denote UTC time, t_a atomic time and t coordinate time. By (316), (317), (322) and (324) we have

$$\Delta \dot{t}_{c*} = \frac{d\Delta t_c}{dt_c} + a_1$$

$$= \frac{d\Delta t_a}{dt_a} + a_1$$

$$= \left[\frac{d\Delta t}{dt} + \frac{d}{dt}(CT - A1)_2 - \frac{d}{dt}(CT - A1)_1\right] \frac{dt}{dt_a} + a_1 \qquad (337)$$

Since a differential delay rate measurement has less accuracy than a differential delay measurement we can assume that

$$\Delta \dot{t}_{c*} \approx \frac{d\Delta t}{dt} + a_1$$

$$= -\vec{x}_{po} \cdot \left[\vec{x}_{2o}(t_2) - \vec{x}_{1o}(t_1)\right] + a_1 \qquad (338)$$

since $\vec{x}_{po}$ is essentially a constant vector.

Now suppose that the radio noise source is on some object in the solar system with coordinates $\vec{x}_{bo}$ relative to the center of mass of the solar system. The object could be an earth satellite, an artificial space probe orbiting the sun, the moon or a planet, or a spacecraft landed on the moon or a planet. Given the coordinate time t_1 of reception of a radio wave at site $\vec{x}_{1e}$ we make a first guess Δt_1 of the coordinate time the wave took to travel from the radio source b. The coordinate time the wave was sent is then

$$t_* = t_1 - \Delta t_1 \tag{339}$$

We next calculate the vector

$$\vec{r}_1 = \vec{x}_{bo}(t_*) - \vec{x}_{1o}(t_1) \tag{340}$$

with the distance unit being light-seconds, and revise the value of Δt_1 by

$$\Delta t_1 = |\vec{r}_1| \tag{341}$$

Using the new value of Δt_1 we recalculate t_* and $\vec{r}_1$, continuing the iteration until the change in Δt_1 is less than some input accuracy constant.

Given the coordinate time t_* of sending the radio wave from the radio source b, we make a first guess Δt_2 of the coordinate time the wave takes to travel to site $\vec{x}_{2e}$. The coordinate time the wave is received is then

$$t_2 = t_* + \Delta t_1 \tag{342}$$

We next calculate the vector

$$\vec{r}_2 = \vec{x}_{be}(t_*) - \vec{x}_{2e}(t_2) \tag{343}$$

with the distance unit being light-seconds, and revise the value of Δt_2 by

$$\Delta t_2 = |\vec{r}_2| \tag{344}$$

Using the new value of Δt_2 we recalculate t_2 and $\vec{r}_2$, continuing the iteration until the change in Δt_2 is less than some input accuracy constant.

The theoretical value of the interferometer differential delay measurement is then

$$\Delta t = t_1 - t_2 = \Delta t_1 - \Delta t_2 \tag{345}$$

with, of course, corrections (324), (317) and (316) being made before comparing with the observations. By (337) to (345) the differential delay rate observable is

$$\Delta \dot{t}_{c*} \approx \frac{d\Delta t}{dt} + a_1 = \frac{\vec{r}_1 \cdot \dot{\vec{r}}_1}{|\vec{r}_1|} - \frac{\vec{r}_2 \cdot \dot{\vec{r}}_2}{|\vec{r}_2|} + a_1 \tag{346}$$

Interferometer observations are so accurate that the theoretical calculations should be performed in the coordinate system with origin at the center of mass of the solar system, as we also decided was necessary for very accurate round trip time delay measurements in Section VII-B.

The long baseline interferometer subroutines have been developed at M.I.T. The particular formulas used in these subroutines are not precisely the same as those we have derived. This is especially true for the effect of the earth rotation on clock rate discussed in (325) to (336). Our purpose in this Section was to get the flavor of the interferometer observables, even though we are not directly involved with their implementation in PEP.

VII-F. Transits and Occultations

VII-F-1. Transits of Mercury

A transit of Mercury or Venus is the crossing of the planet in front of the sun as seen from the earth. When such an event occurs a black dot can be seen traversing the face of the sun for several hours. The observations used in orbit fitting are the times that the limbs of the planet cross the limbs of the sun, so there could be up to four measurements for each transit from many observers scattered around the earth.

Transits of Mercury occur about 13 times a century, whereas those of Venus are much rarer. The atmosphere of Venus makes the Venus transit observations less accurate than the Mercury transit observations. The anomalous advance of Mercury's perihelion over and above that predicted by Newtonian gravitational theory was first discovered by Leverrier about 1850 from an analysis of the Mercury transit observations going back to 1670.

Let us consider a transit of Mercury. We first derive expressions for the conditions of "internal contact", that is for the times at which, as viewed by an earth observer, Mercury is seen to be wholely "inside" the sun with its limb tangent to that of the sun. For each transit there are two internal contacts: the first occurs as Mercury passes in front of the sun and the second just prior to Mercury's apparent passage ahead of the solar disc (see Fig. 12). If a contact is observed on the earth at coordinate time t_3, then the observed light ray passed tangent to Mercury's disc at coordinate time t_2 and tangent to the sun's disc at coordinate time t_1 ($t_3 > t_2 > t_1$), as shown in Fig. 13. The measurement made by an earth observer before the existence of atomic clocks was the UT1 time t_{3*} at the instant t_3, where

$$t_3 = t_{3*} + \Delta t \quad . \tag{347}$$

Let $\vec{r}_e$ and $\dot{\vec{r}}_e$ be the position and velocity of the earth observer relative to the sun. In the notation of this Section VII, for an observer at site i = 1 we have

$$\begin{aligned} \vec{r}_e &= \vec{x}_{es} + \vec{x}_{1e} \\ \dot{\vec{r}}_e &= \dot{\vec{x}}_{es} + \dot{\vec{x}}_{1e} \end{aligned} \tag{348}$$

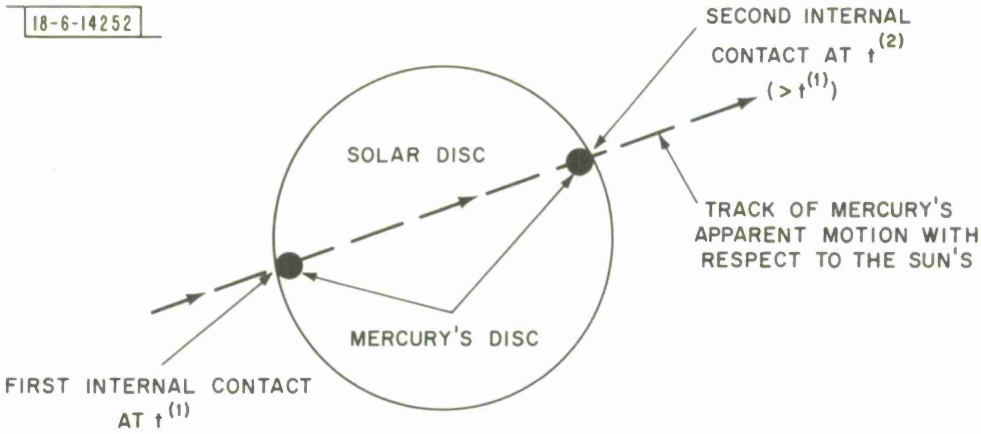

Fig. 12. Mercury's passage in front of the sun as viewed from the earth.

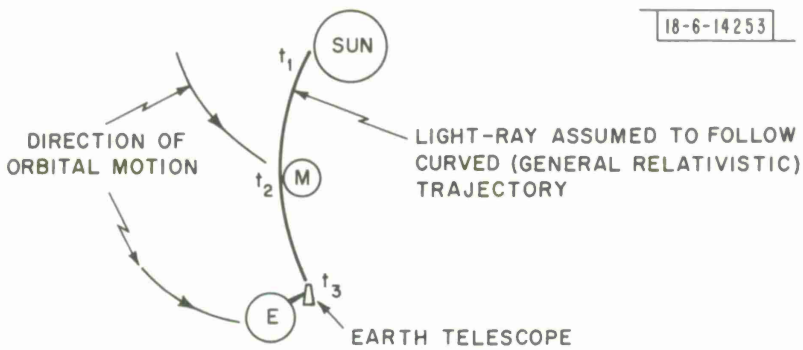

Fig. 13. Path of light ray between the sun and an earth observer at the time of an apparent internal contact (top view).

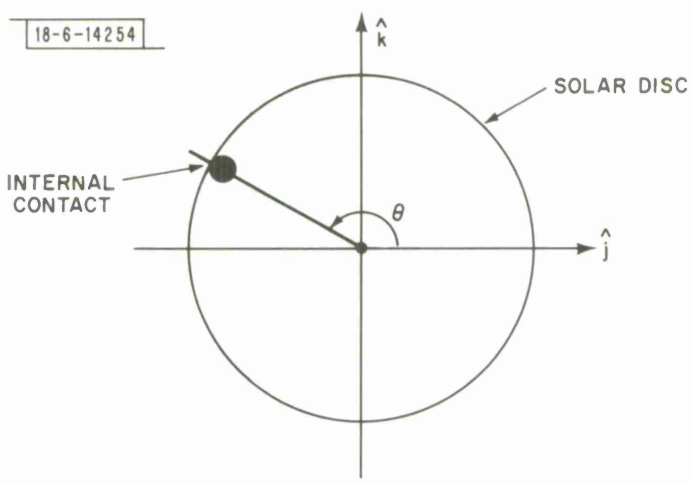

Fig. 14. Geometry of internal contact (front view).

Defining a set of unit vectors $\hat{i}$, $\hat{j}$, $\hat{k}$ by

$$\hat{i} = \frac{\vec{r}_e(t_3)}{r_e(t_3)}$$

$$\hat{j} = \hat{k} \times \hat{i} \tag{349}$$

$$\hat{k} = \frac{\hat{i} \times \dot{\vec{r}}_e(t_3)}{|\hat{i} \times \dot{\vec{r}}_e(t_3)|}$$

we can describe the propagation of a light ray from the point of apparent contact on the sun at t_1, reaching the earth observer at t_3, by the vector

$$\vec{p}_{se}(t) = \vec{\rho}_s(t_1) + \frac{\vec{r}_e(t_3) - \vec{\rho}_s(t_1)}{|\vec{r}_e(t_3) - \vec{\rho}_s(t_1)|} c(t - t_1) \quad ; \; t > t_1 \quad , \tag{350}$$

where

$$\vec{\rho}_s(t_1) = \rho_s \left[\cos\theta \, \hat{j} + \sin\theta \, \hat{k}\right] , \tag{351}$$

and where ρ_s is the sun's radius and θ the angle between the $\hat{j}$ direction and the apparent position of internal contact (see Fig. 14). Thus, $\vec{p}_{se}(t_3)$ is a vector extending from the position on the solar limb at which internal contact appears to take place, to the earth observer at the time of observation t_3. The first term on the right side of (350) is a vector extending from the center of the sun to the position of apparent contact on the solar limb, whereas the second term represents the heliocentric position at time t of the wavefront (light pulse) propagating from the limb at t_1 to the position of the earth observer at t_3.

Let $\vec{r}_m$ and $\dot{\vec{r}}_m$ be the position and velocity, respecitvely, of Mercury relative to the sun. The propagation of a light ray from the point of apparent contact on the Mercury limb at time t_2 reaching the earth observer at time t_3 is described by the vector

$$\vec{p}_{me}(t) = \vec{r}_m(t_2) + \vec{\rho}_m(t_2) + \frac{\vec{r}_e(t_3) - \vec{r}_m(t_2) - \vec{\rho}_m(t_2)}{|\vec{r}_e(t_3) - \vec{r}_m(t_2) - \rho_m(t_2)|} c(t - t_2) \; ; \; t > t_2 \, ,$$

where (352)

$$\vec{\rho}_m(t_2) = \rho_m [\cos\theta \hat{j} + \sin\theta \hat{k}]$$

$$= \frac{\rho_m}{\rho_s} \vec{\rho}_s(t_1) \quad , \tag{353}$$

i.e. where $\vec{\rho}_m(t_2)$ is a vector extending from the center of Mercury at t_2 to the position of apparent contact on the limb of Mercury. From Fig. 14, it is clear that the same value of θ describes both the orientation of the position of internal contact on the solar limb and on Mercury's limb.

Equations (350) and (352), with c representing a constant speed of propagation of light taken to be 1 in the previous formulas in Section VII, assume that the propagation of the rays is rectinlinear whereas, according to general relativity, the paths will be curved (see Fig. 13) in three-space. A simple calculation shows that the bending is so slight (less than 0."001) that we may neglect the curvature. In fact, the only operationally significant aspect of the bending, for the reduction of transit data alone, is essentially that part of the difference in the values of the t_2's between the May and November transits that is attributable to the bending. (During the present era, Mercury transits can occur only in May and November -- the times of year when the earth is near the intersection of the orbital planes of the earth and Mercury.)

Returning to Equations (350) and (352), we see that the condition for an internal contact is that $\vec{p}_{se}(t_3)$ be parallel to $\vec{p}_{me}(t_3)$ since the latter will then coincide with the part of $\vec{p}_{se}(t_3)$ that extends from the position of the limb of Mercury at t_2 to the position of the earth observer at t_3. What we seek, of course, are the values of θ and t_3 for which $\vec{p}_{se}(t_3)$ and $\vec{p}_{me}(t_3)$ are "overlaid". The other unknowns -- t_1 and t_2 -- are, to high accuracy, determined by t_3: The usual method of iteration can be used to determine the light times $t_3 - t_2$ and $t_3 - t_1$ for propagation from the centers of Mercury and the sun, respectively, to the earth observer. The differences between the times of propagation from the limbs and from the centers are completely negligible, i.e. less

than 1 μsec. The mathematical expression of the overlay condition is given by

$$\vec{p}_{se}(t_3) \times \vec{p}_{me}(t_3) = \vec{0} \quad . \tag{354}$$

But, at t_3, we have

$$\begin{aligned} \vec{p}_{se}(t_3) &= \vec{r}_e(t_3) - \vec{\rho}_s(\theta) \\ \vec{p}_{me}(t_3) &= \vec{r}_e(t_3) - \vec{r}_m(t_2) - \vec{\rho}_m(\theta) \end{aligned} \tag{355}$$

which leads to

$$\vec{r}_e(t_3) \times \left[\vec{r}_m(t_2) + \vec{\rho}_m(\theta)\right] + \vec{\rho}_s(\theta) \times \left[\vec{r}_e(t_3) - \vec{r}_m(t_2)\right] = \vec{0} \quad , \tag{356}$$

since $\vec{r}_e \times \vec{r}_e = \vec{\rho}_s \times \vec{\rho}_m = \vec{0}$. Rearranging, we obtain

$$\vec{r}_e(t_3) \times \vec{r}_m(t_2) + \vec{\rho}_s(\theta) \times \left[\left(1 - \frac{\rho_m}{\rho_s}\right)\vec{r}_e(t_3) - \vec{r}_m(t_2)\right] = \vec{0} \quad . \tag{357}$$

Equation (357) represents two independent scalar equations for the two unknowns t_3 and θ. We may resolve (357) using the definitions given in (349) and (351):

$$\vec{r}_e \times \vec{r}_m = r_e \left\{ r_{my} \hat{k} - r_{mz} \hat{j} \right\} \quad , \tag{358}$$

$$\vec{\rho}_s \times \vec{r}_e = r_e \rho_s \left\{ - \cos\theta \hat{k} + \sin\theta \hat{j} \right\} \quad , \tag{359}$$

$$\begin{aligned} -\vec{\rho}_s \times \vec{r}_m &= r_{mx} \rho_s \left\{ \cos\theta \hat{k} - \sin\theta \hat{j} \right\} \\ &\quad + r_{my} \rho_s \left\{ \sin\theta \hat{i} \right\} \\ &\quad + r_{mz} \rho_s \left\{ - \cos\theta \hat{i} \right\} \\ &= \rho_s \left\{ (r_{my} \sin\theta - r_{mz} \cos\theta) \hat{i} - r_{mx} \sin\theta \hat{j} \right. \\ &\quad \left. + r_{mx} \cos\theta \hat{k} \right\} \quad , \end{aligned} \tag{360}$$

where the $\hat{i}$, $\hat{j}$, and $\hat{k}$ components of $\vec{r}_m(t_2)$ have been denoted by r_{mx}, r_{my}, and r_{mz}, respectively. Hence,

$$\hat{i} : \frac{r_{my}}{r_{mz}} = \cot\theta \quad , \tag{361}$$

$$\hat{j} : -r_e r_{mz} + r_e \rho_s \left(1 - \frac{\rho_m}{\rho_s}\right) \sin\theta - r_{mx} \rho_s \sin\theta = 0$$

$$\frac{r_e r_{mz}}{r_e(\rho_s - \rho_m) - r_{mx} \rho_s} = \sin\theta \ , \tag{362}$$

$$\hat{k} : r_e r_{my} - r_e (\rho_s - \rho_m) \cos\theta + r_{mx} \rho_s \cos\theta = 0$$

$$\frac{r_e r_{my}}{r_e (\rho_s - \rho_m) - r_{mx} \rho_s} = \cos\theta \tag{363}$$

from which we can see explicitly that only two of the three equations are independent: dividing (363) by (362) yields (361). Eliminating θ from (362) and (363), we obtain:

$$r_e^2 \left(r_{my}^2 + r_{mz}^2\right) = \left[r_e (\rho_s - \rho_m) - r_{mx} \rho_s\right]^2 \quad , \tag{364}$$

i.e.,

$$r_e \left(r_m^2 - r_{mx}^2\right)^{1/2} = r_e (\rho_s - \rho_m) - r_{mx} \rho_s \quad , \tag{365}$$

since $\rho_s \gg \rho_m$ and $r_e \gg r_{mx}$. Equation (365) must be solved for t_3 whence Eq. (361), for example, will yield θ.

Let us assume that we are favored with an initial estimate $t_3^{(o)}$ which is sufficiently close to t_3 that in expansions about $t_3^{(o)}$ we may safely neglect powers of δt ($\equiv t_3 - t_3^{(o)}$) above the first. Thus, for example, we may write

$$\vec{r}_e = r_e \hat{i} \quad , \tag{366}$$

where

$$r_e(t_3) = [\vec{r}_e(t_3) \cdot \vec{r}_e(t_3)]^{1/2}$$

$$\approx [\{\vec{r}_e(t_3^{(o)}) + \dot{\vec{r}}_e(t_3^{(o)})\,\delta t\} \cdot \{\vec{r}_e(t_3^{(o)}) + \dot{\vec{r}}_e(t_e^{(o)})\,\delta t\}]^{1/2}$$

$$\approx [r_e(t_3^{(o)}) + 2\,\vec{r}_e \cdot \dot{\vec{r}}_e(t_3^{(o)})\,\delta t]^{1/2}$$

$$\approx r_e(t_e^{(o)}) + \hat{i}(t_e^{(o)}) \cdot \dot{\vec{r}}(t_3^{(o)})\,\delta t \tag{367}$$

and

$$\hat{i}(t_3) \approx \frac{\vec{r}_e(t_e^{(o)}) + \dot{\vec{r}}_e(t_3^{(o)})\,\delta t}{|\vec{r}_e(t_3^{(o)}) + \dot{\vec{r}}_e(t_3^{(o)})\,\delta t|}$$

$$\approx \frac{[\vec{r}_e(t_3^{(o)}) + \dot{\vec{r}}_e(t_3^{(o)})\,\delta t]}{[r_e(t_3^{(o)}) + \hat{i}(t_3^{(o)}) \cdot \dot{\vec{r}}(t_e^{(o)})\,\delta t]}$$

$$\approx \frac{\vec{r}_e(t_3^{(o)}) + \dot{\vec{r}}_e(t_3^{(o)})\,\delta t}{r_e(t_3^{(o)})}\left[1 - \hat{i}(t_e^{(o)}) \cdot \dot{\vec{r}}_e(t_3^{(o)})\frac{\delta t}{r_e(t_3^{(o)})}\right]$$

$$\approx \hat{i}(t_3^{(o)}) + \left\{\dot{\vec{r}}_e(t_3^{(o)}) - \left[\hat{i}(t_3^{(o)}) \cdot \dot{\vec{r}}_e(t_e^{(o)})\right]\hat{i}(t_e^{(o)})\right\}\frac{\delta t}{r_e(t_3^{(o)})} \tag{368}$$

since

$$t_3 = t_3^{(o)} + \delta t \quad . \tag{369}$$

Recombining yields, of course,

$$\vec{r}_e(t_3) \approx \vec{r}_e(t_e^{(o)}) + \dot{\vec{r}}_e(t_3^{(o)})\,\delta t \quad . \tag{370}$$

Let us suppose that

$$t_2 = t_2^{(o)} + \delta t' \tag{371}$$

where our first guess $t_2^{(o)}$ for t_2 might be $t_3^{(o)}$ or $t_3^{(o)}$ corrected by a first guess for light time. We have exactly

$$t_2 = t_3 - \frac{|\vec{r}_e(t_3) - \vec{r}_m(t_2)|}{c} \tag{372}$$

Since

$$\begin{aligned}
|\vec{r}_e(t_3) - \vec{r}_m(t_2)| &= |\vec{r}_e(t_3^{(o)} + \delta t) - \vec{r}_m(t_2^{(o)} + \delta t')| \\
&= \Big\{ [\vec{r}_e(t_3^{(o)}) + \dot{\vec{r}}_e(t_3^{(o)})\,\delta t - \vec{r}_m(t_2^{(o)}) - \dot{\vec{r}}_m(t_2^{(o)})\,\delta t'] \\
&\quad \cdot [r_e(t_e^{(o)}) + r_e(t_3^{(o)})\,\delta t - r_m(t_2^{(o)}) - r_m(t_2^{(o)})\,\delta t']\Big\}^{1/2} \\
&\approx |r_e(t_3^{(o)}) - r_m(t_2^{(o)})| + \frac{\{\vec{r}_e(t_3^{(o)}) - \vec{r}_m(t_2^{(o)})\}}{|\vec{r}_e(t_3^{(o)}) - \vec{r}_m(t_2^{(o)})|} \\
&\quad \cdot \{\dot{\vec{r}}_e(t_3^{(o)})\,\delta t - \dot{\vec{r}}_m(t_2^{(o)})\,\delta t'\}
\end{aligned}$$

we obtain

$$t_2 \approx t_3^{(o)} + \delta t - \frac{1}{c}\,|\vec{r}_e(t_3^{(o)}) - \vec{r}_m(t_2^{(o)})| \tag{373}$$

with an error of the order of $(v/c)\,\delta t$, when v is the difference in planetary velocities projected along the direction of the difference in the planetary positions, and is therefore negligible.

In the following we shall assume that $\delta t' \approx \delta t$, which will be true at later stages in the iterative process described below. We therefore have the following expansions:

$$
\begin{aligned}
r_m^{\,2} &\approx \vec{r}_m(t_2^{(o)} + \delta t) \cdot \vec{r}_m(t_2^{(o)} + \delta t) \\
&\approx [\vec{r}_m(t_2^{(o)}) + \dot{\vec{r}}_m(t_2^{(o)})\,\delta t\,] \cdot [\,\vec{r}_m(t_2^{(o)}) + \dot{\vec{r}}_m(t_2^{(o)})\,\delta t\,] \\
&\approx r_m^{\,2}(t_2^{(o)}) + 2\vec{r}_m(t_2^{(o)}) \cdot \dot{\vec{r}}_m(t_2^{(o)})\,\delta t \quad , \qquad (374)
\end{aligned}
$$

$$
\begin{aligned}
r_{mx} &= \hat{i}\,(t_3) \cdot \vec{r}_m(t_2) \approx \hat{i}\,(t_3^{(o)} + \delta t) \cdot \vec{r}_m(t_2^{(o)} + \delta t) \\
&\approx \hat{i}\,(t_3^{(o)}) \cdot \vec{r}_m(t_2^{(o)}) + \Big\{\vec{r}_m(t_2^{(o)}) \cdot \dot{\vec{r}}_e(t_3^{(o)}) \\
&\quad - [\,\hat{i}\,(t_3^{(o)}) \cdot \dot{\vec{r}}_e(t_3^{(o)})\,][\,\hat{i}\,(t_3^{(o)}) \cdot \vec{r}_m(t_2^{(o)})\,] \\
&\quad + \vec{r}_e(t_3^{(o)}) \cdot \dot{\vec{r}}_m(t_2^{(o)})\Big\} \frac{\delta t}{r_e(t_3^{(o)})} \quad , \qquad (375)
\end{aligned}
$$

and

$$
\begin{aligned}
r_{mx}^{\,2} &\approx [\,\hat{i}\,(t_3^{(o)}) \cdot \vec{r}_m(t_2^{(o)})]^2 + 2\left\{\hat{i}(t_3^{(o)}) \cdot \vec{r}_m(t_2^{(o)})\right\} \\
&\quad \Big\{\vec{r}_m(t_2^{(o)}) \cdot \dot{\vec{r}}_e(t_3^{(o)}) + \vec{r}_e(t_3^{(o)}) \cdot \dot{\vec{r}}_m(t_2^{(o)}) \\
&\quad - [\,\hat{i}(t_3^{(o)}) \cdot \dot{\vec{r}}_e(t_3^{(o)})][\,\hat{i}\,(t_3^{(o)}) \cdot \vec{r}_m(t_2^{(o)})]\Big\} \frac{\delta t}{r_e(t_3^{(o)})}
\end{aligned}
\qquad (376)
$$

where we have used (368) and (374). Substituting into (365) yields

$$
\begin{aligned}
&[\,r_e + (\hat{i} \cdot \dot{\vec{r}}_e)\,\delta t\,]\Big\{r_m^{\,2} - (\hat{i} \cdot \vec{r}_m)^2 + 2[\vec{r}_m \cdot \dot{\vec{r}}_m - (\hat{i} \cdot \vec{r}_m)(\vec{r}_m \cdot \dot{\vec{r}}_e \\
&\qquad + \vec{r}_e \cdot \dot{\vec{r}}_m - [\,\hat{i} \cdot \dot{\vec{r}}_e][\,\hat{i} \cdot \vec{r}_m])\,\frac{1}{r_e}\,]\,\delta t\Big\}^{1/2}
\end{aligned}
$$

$$\approx \left(r_e + \hat{i} \cdot \dot{\vec{r}}_e \, \delta t\right)(\rho_s - \rho_m) - \rho_s \left[\hat{i} \cdot \vec{r}_m + \left\{ \vec{r}_m \cdot \dot{\vec{r}}_e + \vec{r}_e \cdot \dot{\vec{r}}_m - \left(\hat{i} \cdot \dot{\vec{r}}_e\right)\left(\hat{i} \cdot \vec{r}_m\right) \right\} \frac{\delta t}{r_e} \right] , \tag{377}$$

where the common argument of $\vec{r}_m$ and $\dot{\vec{r}}_m$ is $t_2^{(o)}$ and the common argument of $\hat{i}$, $\vec{r}_e$ and $\dot{\vec{r}}_e$ is $t_3^{(o)}$. Since

$$\left\{ r_m^{\,2} - (\hat{i} \cdot \vec{r}_m)^2 + 2 \left[\vec{r}_m \cdot \dot{\vec{r}}_m - (\hat{i} \cdot \vec{r}_m)(\vec{r}_m \cdot \dot{\vec{r}}_e + \vec{r}_e \cdot \dot{\vec{r}}_m - [\hat{i} \cdot \dot{\vec{r}}_e][\hat{i} \cdot \vec{r}_m]) \frac{1}{r_e} \right] \delta t \right\}^{1/2}$$

$$\approx \left[r_m^{\,2} - (\hat{i} \cdot \vec{r}_m)^2 \right]^{1/2} + \frac{\vec{r}_m \cdot \dot{\vec{r}}_m - (\hat{i} \cdot \vec{r}_m)(\vec{r}_m \cdot \dot{\vec{r}}_e + \vec{r}_e \cdot \dot{\vec{r}}_m - [\hat{i} \cdot \dot{\vec{r}}_e][\hat{i} \cdot \vec{r}_m]) \frac{1}{r_e}}{\left[r_m^{\,2} - (\hat{i} \cdot \vec{r}_m)^2 \right]^{1/2}} \delta t, \tag{378}$$

we find

$$\left\{ \left[r_m^{\,2} - (\hat{i} \cdot \vec{r}_m)^2 \right]^{1/2} (\hat{i} \cdot \dot{\vec{r}}_e) + \frac{r_e \, \vec{r}_m \cdot \dot{\vec{r}}_m - (\hat{i} \cdot \vec{r}_m)(\vec{r}_m \cdot \dot{\vec{r}}_e + \vec{r}_e \cdot \dot{\vec{r}}_m - [\hat{i} \cdot \dot{\vec{r}}_e][\hat{i} \cdot \vec{r}_m]}{\left[r_m^{\,2} - (\hat{i} \cdot \vec{r}_m)^2 \right]^{1/2}} - (\rho_s - \rho_m)(\hat{i} \cdot \dot{\vec{r}}_e) + \rho_s \frac{\vec{r}_m \cdot \dot{\vec{r}}_e + \vec{r}_e \cdot \dot{\vec{r}}_m - (\hat{i} \cdot \dot{\vec{r}}_e)(\hat{i} \cdot \vec{r}_m)}{r_e} \right\} \delta t$$

$$= (\rho_s \cdot \rho_m) \, r_e - \rho_s (\hat{i} \cdot \vec{r}_m) - r_e \left[r_m^{\,2} - (\hat{i} \cdot \vec{r}_m)^2 \right]^{1/2} , \tag{379}$$

and finally

$$\delta t \approx r_e \left| \hat{r}_e \times \vec{r}_m \right| \left\{ (\rho_s - \rho_m) r_e - \rho_s (\hat{r}_e \cdot \vec{r}_m) - \left| \vec{r}_e \times \vec{r}_m \right| \right\}$$

$$\left\{ r_m^{\,2} (\vec{r}_e \cdot \dot{\vec{r}}_e) + r_e^{\,2} (\vec{r}_m \cdot \dot{\vec{r}}_m) - (\vec{r}_e \cdot \vec{r}_m)(\vec{r}_m \cdot \dot{\vec{r}}_e + \vec{r}_e \cdot \dot{\vec{r}}_m) \right.$$

$$- \left[(\rho_s - \rho_m)(\vec{r}_e \cdot \dot{\vec{r}}_e) + \rho_s (\hat{r}_e \cdot \dot{\vec{r}}_e)(\hat{r}_e \cdot \vec{r}_m) - \rho_s (\vec{r}_m \cdot \dot{\vec{r}}_e + \vec{r}_e \cdot \dot{\vec{r}}_m) \right]$$

$$\left. \cdot \left[\left| \hat{r}_e \times \vec{r}_m \right| \right] \right\}^{-1} , \tag{380}$$

since

$$\left[r_m^{\,2} - (\hat{i} \cdot \vec{r}_m)^2 \right] \left[\hat{i} \cdot \dot{\vec{r}}_e \right] + r_e \vec{r}_m \cdot \dot{\vec{r}}_m - (\hat{i} \cdot \vec{r}_m)(\vec{r}_m \cdot \dot{\vec{r}}_e + \vec{r}_e \cdot \dot{\vec{r}}_m - \left[\hat{i} \cdot \dot{\vec{r}}_e \right] \left[\hat{i} \cdot \vec{r}_m \right])$$

$$= r_m^{\,2} (\hat{i} \cdot \dot{\vec{r}}_e) + r_e (\vec{r}_m \cdot \dot{\vec{r}}_m) - (\hat{i} \cdot \vec{r}_m)(\vec{r}_m \cdot \dot{\vec{r}}_e + \vec{r}_e \cdot \dot{\vec{r}}_m) , \tag{381}$$

$$\left[r_m^{\,2} - (\hat{i} \cdot \vec{r}_m)^2 \right]^{1/2} = \left| \hat{r}_e \times \vec{r}_m \right| , \tag{382}$$

and

$$\hat{i} \equiv \hat{r}_e = \vec{r}_e / r_e \tag{383}$$

The solution for δt ($\equiv \delta t^{(1)}$) given in (380) can be considered as providing the next approximation to t_3 through the relation

$$t_3^{(1)} = t_3^{(o)} + \delta t^{(1)} \tag{384}$$

The next approximation is obtained from (380) by evaluating the right side with $t_3^{(o)}$ replaced by $t_3^{(1)}$ and $t_2^{(o)}$ by

$$t_2^{(1)} = t_3^{(o)} + \delta t^{(1)} - \frac{1}{c} \left| \vec{r}_e(t_3^{(o)}) - \vec{r}_m(t_2^{(o)}) \right| \tag{385}$$

(see (372) and (374)), thereby obtaining $\delta t^{(2)}$ with

$$t_3^{(2)} = t_3^{(1)} + \delta t^{(2)} = t_3^{(o)} + \delta t^{(1)} + \delta t^{(2)} \tag{386}$$

The iteration can be continued until convergence is achieved. In practice, one continues the process until $\delta t^{(n)}$ has been evaluated with $\left| \delta t^{(n)} \right| < \eta$ but $\left| \delta t^{(n-1)} \right| > \eta$,

where η is an input accuracy constant (say $\eta \approx 0.05$ sec).

The above solution holds for either of the internal contacts provided that the initial guess $t_3^{(o)}$ properly distinguishes between them. To evaluate θ in either case, we use (362) and (363) in the relation

$$
\begin{aligned}
\tan\frac{\theta}{2} &= \frac{1 - \cos\theta}{\sin\theta} \\
&= \frac{r_e(\rho_s - \rho_m) - r_{mx}\rho_s - r_e r_{my}}{r_e r_{mz}} \\
&= \left[\frac{r_e(\rho_s - \rho_m) - (\vec{r}_m \cdot \hat{r}_e)\rho_s - (\hat{k} \times \vec{r}_e)\cdot\vec{r}_m}{\vec{r}_m \cdot (\vec{r}_e \times \dot{\vec{r}}_e)}\right] |\dot{\vec{r}}_e| \\
&= \frac{[r_e(\rho_s - \rho_m) - (\vec{r}_m \cdot \hat{r}_e)\rho_s]\,|\dot{\vec{r}}_e| - [(\hat{r}_e \times \dot{\vec{r}}_e) \times \vec{r}_e]\cdot\vec{r}_m}{\vec{r}_m \cdot (\vec{r}_e \times \dot{\vec{r}}_e)} \\
&= \frac{[r_e(\rho_s - \rho_m) - (\vec{r}_m \cdot \hat{r}_e)\rho_s]\,|\dot{\vec{r}}| + r_e[(\dot{\vec{r}}_e \cdot \vec{r}_m) - (\hat{r}_e \cdot \dot{\vec{r}}_e)(\hat{r}_e \cdot \vec{r}_m)]}{\vec{r}_m \cdot (\vec{r}_e \times \dot{\vec{r}}_e)}
\end{aligned}
\tag{387}
$$

The condition for internal contact differs from that for external contact only in that (353) must be replaced by

$$
\vec{\rho}_m(t_2) = -\frac{\rho_m}{\rho_s}\,\vec{\rho}_s(t_1) \quad , \tag{388}
$$

since, for external contact $\vec{\rho}_m$ and $\vec{\rho}_s$ are antiparallel rather than parallel. Hence the solution for internal contacts, described by (380) and the following paragraph, applies to external contacts as well if ρ_m is replaced by $-\rho_m$ throughout. This analysis of Mercury (or Venus) transits is due to I. I. Shapiro.

VII-F-2. Stellar Occultations

The observable used in orbit fitting for the occultation of a star by the moon or planet is the time of occurrence of this event. Before the advent of atomic clocks, this time was the UT1 time t_{3*} with the coordinate time t_3 being given by (347).

Let $\vec{r}_*$ be a unit vector pointing from the earth observer at coordinate time t_3 towards the star and let $\vec{r}_b$ be a vector pointing from the earth observer at coordinate time t_3 to the moon or planet at retarded coordinate time t_2 with

$$t_2 = t_3 - r_b/c \tag{389}$$

Let us define the unit vectors

$$\begin{aligned} \hat{i} &= \frac{\vec{r}_b}{|\vec{r}_b|} \\ \hat{j} &= \hat{k} \times \hat{i} \\ \hat{k} &= \frac{\hat{i} \times \dot{\vec{r}}_b}{|\hat{i} \times \dot{\vec{r}}_b|} \end{aligned} \tag{390}$$

Let $\vec{\rho}_b$ be a vector from the center of the moon or planet to the point on the limb where the star is occulted. The condition of occultation is that $\vec{r}_*$ and $(\vec{r}_b + \vec{\rho}_b)$ be parallel:

$$\vec{r}_* \times (\vec{r}_b + \vec{\rho}_b) = \vec{0} \tag{391}$$

If we write

$$\begin{aligned} \vec{\rho}_b &= \rho_b [\cos\theta\, \hat{j} + \sin\theta\, \hat{k}] \\ \vec{r}_b &= r_b\, \hat{i} \\ \vec{r}_* &= r_{*x}\, \hat{i} + r_{*y}\, \hat{j} + r_{*z}\, \hat{k} \end{aligned} \tag{392}$$

the components of the vector equation (391) yield

$$\frac{r_{*y}}{r_{*z}} = \cot\theta \tag{393}$$

$$\frac{r_b\, r_{*z}}{\rho_b\, r_{*x}} = \sin\theta \tag{394}$$

$$\frac{r_b\, r_{*y}}{\rho_b\, r_{*x}} = \cos\theta \tag{395}$$

Only two of the above 3 equations are independent: dividing (395) by (394) yields (393). Squaring (394) and (395) and adding we obtain

$$\frac{r_b^{\,2}\, r_{*z}^{\,2}}{\rho_b^{\,2}\, r_{*x}^{\,2}} + \frac{r_b^{\,2}\, r_{*y}^{\,2}}{\rho_b^{\,2}\, r_{*x}^{\,2}} = 1 \tag{396}$$

which implies

$$r_b\,(1 - r_{*x})^{1/2} = \rho_b\, r_{*x} \tag{397}$$

since

$$r_{*x}^{\,2} + r_{*y}^{\,2} + r_{*z}^{\,2} = 1 \tag{398}$$

Let us assume that we are favored with an initial estimate $t_3^{(o)}$ which is sufficiently close to t_3 so that in expansions about $t_3^{(o)}$ we may safely neglect powers of δt ($\equiv t_3 - t_3^{(o)}$) above the first. We have

$$\hat{i} = \frac{\vec{r}_b\,(t_3)}{|\vec{r}_b(t_3)|} \approx \frac{\vec{r}_b(t_3^{(o)}) + \dot{\vec{r}}_b(t_3^{(o)})\,\delta t}{|\vec{r}_b(t_3^{(o)}) + \dot{\vec{r}}_b(t_3^{(o)})\,\delta t|}$$

$$\approx \hat{i}\,(t_3^{(o)}) + \left\{\dot{\vec{r}}_b(t_3^{(o)}) - [\hat{i}\,(t_3^{(o)}) \cdot \dot{\vec{r}}_b(t_3^{(o)})]\,\hat{i}\,(t_3^{(o)})\right\} \frac{\delta t}{r_b\,(t_3^{(o)})} \tag{399}$$

so that

$$r_{*x} = \vec{r}_* \cdot \hat{i} = r_{*x}(t_3^{(o)}) + \frac{\delta t}{r_b(t_3^{(o)})} \left\{ \vec{r}_* \cdot \dot{\vec{r}}_b(t_3^{(o)}) - \left[\hat{i}(t_3^{(o)}) \cdot \dot{\vec{r}}_b(t_3^{(o)}) \right] \right.$$

$$\left. \cdot\, r_{*x}(t_3^{(o)}) \right\} \tag{400}$$

Equations (397) and (400) imply

$$r_b \left[1 - r_{*x}^2\right]^{1/2} \left\{ 1 + \frac{r_{*x}\, \delta t}{r_b\left[1 - r_{*x}^2\right]} \left[\vec{r}_* \cdot \dot{\vec{r}}_b - (\hat{i} \cdot \dot{\vec{r}}_b)\, r_{*x} \right] \right\}$$

$$\approx \rho_b \left\{ r_{*x} + \frac{\delta t}{r_b} \left[\vec{r}_* \cdot \dot{\vec{r}}_b - (\hat{i} \cdot \dot{\vec{r}}_b)\, r_{*x} \right] \right\} \tag{401}$$

where all vectors are evaluated at time $t_3^{(o)}$. Solving for δt we have

$$\delta t = r_b \left[r_b (1 - r_{*x})^{1/2} - \rho_b\, r_{*x} \right] \left[1 - \frac{r_{*x}}{(1 - r_{*x}^2)^{1/2}} \right]^{-1}$$

$$\cdot \left[\vec{r}_* \cdot \dot{\vec{r}}_b - (\hat{i} \cdot \dot{\vec{r}}_b)\, r_{*x} \right]^{-1} \tag{402}$$

The solution for δt ($\equiv \delta t^{(1)}$) given in (402) can be considered as providing the next approximation to t_3 through the relation

$$t_3^{(1)} = t_3^{(o)} + \delta t^{(1)} \tag{403}$$

The next approximation is obtained from (402) be evaluating the right side with $t_3^{(o)}$ replaced by $t_3^{(1)}$ and $t_2^{(o)}$ by

$$t_2^{(1)} = t_3^{(o)} + \delta t^{(1)} - \frac{r_b(t_3^{(o)})}{c} \tag{404}$$

(see (389)), thereby obtaining $\delta t^{(2)}$ with

$$t_3^{(2)} = t_3^{(1)} + \delta t^{(2)} = t_3^{(o)} + \delta t^{(1)} + \delta t^{(2)} \tag{405}$$

The iteration is continued until $\delta t^{(n)}$ is less in absolute value than an input accuracy constant.

The above solution holds for either the first or second occultation of a star by the moon or a planet provided that the initial guess $t_3^{(o)}$ properly distinguishes between them. To evaluate θ in either case, we use (394) and (395) in the relation

$$\tan\frac{\theta}{2} = \frac{1 - \cos\theta}{\sin\theta} = \frac{\rho_b r_{*x} - r_b r_{*y}}{r_b r_{*z}} \tag{406}$$

The determination of θ is very important if ρ_b is not a constant, which is the case for the Moon where Watt's limb corrections or their equivalent have to be applied. The adjustment to ρ_b can be done simultaneously with the adjustment to t_3 in the iterative process described above.

VIII. PARTIAL DERIVATIVES OF OBSERVATIONS

By (184) the partial derivative of the theoretical value h of an observation with respect to a parameter β is

$$\frac{\partial h}{\partial \beta} = \sum_{i=1}^{1 \text{ or } 2} \sum_{j=1}^{6} \frac{\partial h}{\partial r_i^j} \frac{\partial r_i^j}{\partial \beta} + \sum_{j=1}^{m} \frac{\partial h}{\partial \alpha^j} \frac{\partial \alpha^j}{\partial \beta} \tag{407}$$

where $(r_i^1, \ldots, r_i^6)$ are the components of the position and velocity of the observed object relative to observing site $i(i = 1, 2$ if two sites are involved in the observation and $i = 1$ if only one site is involved). For most observations

$$\frac{\partial h}{\partial r_i^j} = 0, \quad j = 4, 5, 6 \tag{408}$$

except for such things as doppler shift measurements.

For observations of an earth satellite b or moon $m = b$ we have by (185)

$$\frac{\partial r_i^j}{\partial \beta} = \frac{\partial x_{be}^j(t_*)}{\partial \beta} - \frac{\partial x_{ie}^j(t_*)}{\partial \beta} \tag{409}$$

For observations of a planet p or sun $p = s$ with $\vec{x}_{ss} = \vec{0}$ we have by (186)

$$\frac{\partial r_i^j}{\partial \beta} = \frac{\partial x_{ps}^j(t_*)}{\partial \beta} - \left[\frac{\partial x_{ie}^j(t_i)}{\partial \beta} + \frac{\partial x_{cs}^j(t_i)}{\partial \beta} - \frac{M_m}{M_c} \frac{\partial x_{me}^j(t_i)}{\partial \beta} - x_{me}^j(t_i) \frac{\partial}{\partial \beta}\left(\frac{M_m}{M_c}\right)\right] \tag{410}$$

For a star p external to the solar system we have by (187)

$$\frac{\partial r_1^j}{\partial \beta} = \frac{\partial x_{po}^j}{\partial \beta} - \frac{1}{R}\left[\frac{\partial x_{1e}^j(t_1)}{\partial \beta} + \frac{\partial x_{cs}^j(t_1)}{\partial \beta}\right.$$

$$- \frac{M_m}{M_c} \frac{\partial x^j_{me}(t_1)}{\partial \beta} - x^j_{me}(t_1) \frac{\partial}{\partial \beta}\left(\frac{M_m}{M_c}\right) + \frac{\partial x^j_{so}(t_1)}{\partial \beta}\Bigg]$$

$$+ \frac{1}{R^2} \frac{\partial R}{\partial \beta} \left[\vec{x}_{1e}(t_1) + \vec{x}_{cs}(t_1) - \frac{M_m}{M_c} \vec{x}_{me}(t_1) + x_{so}(t_1)\right] \tag{411}$$

The partial derivatives of the coordinates for the various bodies in the solar system are determined by numerical integration as explained in Section VI, except for β being the astronomical unit in light seconds (AU). The coordinates as interpolated from the ephemeris magnetic tapes are in astronomical units and are multiplied by AU to get the coordinates $x^j_{\mu\nu}$ used in the formulas of Section VII. Thus we have

$$\frac{\partial x^j_{\mu\nu}}{\partial (AU)} = \frac{x^j_{\mu\nu}}{AU} \tag{412}$$

For the unit vector $\vec{x}_{po}$ pointing at a star p we have by (318)

$$\frac{\partial x^1_{po}}{\partial \beta} = - x^2_{po} \frac{\partial \lambda}{\partial \beta} - \cos \lambda \sin \eta \frac{\partial \eta}{\partial \beta}$$

$$\frac{\partial x^2_{po}}{\partial \beta} = x^1_{po} \frac{\partial \lambda}{\partial \beta} - \sin \lambda \cos \eta \frac{\partial \eta}{\partial \beta} \tag{413}$$

$$\frac{\partial x^3_{po}}{\partial \beta} = \cos \eta \frac{\partial \eta}{\partial \beta}$$

where by (319)

$$\frac{\partial\lambda}{\partial\lambda_o} = 1, \quad \frac{\partial\lambda}{\partial\lambda_1} = (t - t_o)$$

$$\frac{\partial\eta}{\partial\eta_o} = 1, \quad \frac{\partial\eta}{\partial\eta_1} = (t - t_o) \tag{414}$$

with all other partial derivatives of the right ascension and declination λ,η of the star being zero.

In (410) and (411) we have

$$\frac{\partial}{\partial\beta}\left(\frac{M_m}{M_c}\right) = \begin{cases} 1 & \text{if } \beta = M_m/M_c \\ 0 & \end{cases} \tag{415}$$

so that the ratio of the mass of the moon to the total mass of the earth-moon system is determined by observations of objects external to the earth-moon system through the motion of the earth about the earth-moon barycenter.

If β is a constant bias for the measurement, say $\beta = \alpha^1$, we have in (407)

$$\frac{\partial h}{\partial\beta} = 1 \tag{416}$$

The philosophy in PEP is to add the bias to the theoretical value of an observation before comparing with the observation.

The expressions for the $\partial h/\partial r_i^j$ depend on the specific observable type. In the following we derive these expressions for the various observables discussed in Section VII. We also derive the partial derivatives with respect to parameters α^j besides constant biases which affect observations but not motion.

All the observable partial derivatives that are programmed in PEP are checked by the difference method using the same technique explained in (183) for the motion partial derivatives.

VIII-A. Observing Site Coordinates

The only non-zero partial derivatives for site coordinates x_{ie}^j in inertial space are with respect to precession parameters and site coordinates fixed in the earth $(\rho_i, \theta_i, \phi_i')$ for geocentric spherical coordinates and $(\delta_i, \theta_i, z_i)$ for geocentric cylindrical coordinates. Let (u_i^1, u_i^2, u_i^3) be the rectangular coordinates of the site in a coordinate system fixed in the earth. By (191) we have

$$\frac{\partial u_i^j}{\partial \rho_i} = \frac{u_i^j}{\rho_i} \qquad j = 1, 2, 3 \tag{417}$$

$$\frac{\partial u_i^1}{\partial \theta_i} = u_i^2 \quad , \quad \frac{\partial u_i^2}{\partial \theta_i} = - u_i^1 \quad , \quad \frac{\partial u_i^3}{\partial \theta_i} = 0 \tag{418}$$

$$\frac{\partial u_i^1}{\partial \phi_i'} = - \rho_i \cos \theta_i \sin \phi_i'$$

$$\frac{\partial u_i^2}{\partial \phi_i'} = \rho_i \sin \theta_i \sin \phi_i' \tag{419}$$

$$\frac{\partial u_i^3}{\partial \phi_i'} = \rho_i \cos \phi_i'$$

and by (193) we have

$$\frac{\partial u_i^1}{\partial \delta_i} = \cos \theta_i \quad , \quad \frac{\partial u_i^2}{\partial \delta_i} = - \sin \theta_i \quad , \quad \frac{\partial u_i^3}{\partial \delta_i} = 0 \tag{420}$$

$$\frac{\partial u^1}{\partial \theta_i} = u_i^2 \quad , \quad \frac{\partial u_i^2}{\partial \theta_i} = - u_i^1 \quad , \quad \frac{\partial u_i^3}{\partial \theta_i} = 0 \tag{421}$$

$$\frac{\partial u_i^2}{\partial z_i} = 0 \quad , \quad \frac{\partial u_i^2}{\partial z_i} = 0 \quad , \quad \frac{\partial u_i^3}{\partial z_i} = 1 \tag{422}$$

Finally by (189) and (201) we have

$$\left.\begin{aligned} \frac{\partial x_{ie}^{j}}{\partial \beta} &= \sum_{\ell=1}^{3} A_{\ell j} \frac{\partial u_i^{\ell}}{\partial \beta} \\ \frac{\partial}{\partial \beta} \frac{dx_{ie}^{j}}{dt} &= \sum_{\ell=1}^{3} \frac{dA_{\ell j}}{dt} \frac{\partial u_i^{\ell}}{\partial \beta} \end{aligned}\right\} \quad j = 1, 2, 3 \qquad (423)$$

for site coordinates β. If β is some parameter upon which the motion of the earth about its center of mass depends we have

$$\left.\begin{aligned} \frac{\partial x_{ie}^{j}}{\partial \beta} &= \sum_{\ell=1}^{3} \frac{\partial A_{\ell j}}{\partial \beta} u_i^{\ell} \\ \frac{\partial}{\partial \beta} \frac{dx_{ie}^{j}}{dt} &= \sum_{\ell=1}^{3} \frac{d}{dt} \left(\frac{\partial A_{\ell j}}{\partial \beta}\right) u_i^{\ell} \end{aligned}\right\} \quad j = 1, 2, 3 \qquad (424)$$

The partial derivatives with respect to parameters in the representation $A = WSNPD$ are given in Sections IV-E-1 and IV-E-2. With extended series of accurate long baseline interferometer observations it will be necessary to generate the matrix A by numerically integrating the equations for the motion of the earth about its center of mass. The partial derivatives of A with respect to the initial conditions of this motion and other parameters would also be generated by numerical integration.

VIII-B. Time Delay

For h being the round trip time delay Δt we have by (215)

$$\frac{\partial \Delta t}{\partial r_i^j} = \frac{r_i^j}{r_i} \tag{425}$$

For $\alpha = \rho$ being the radius of a planet in light-seconds we have by (226)

$$\frac{\partial \Delta t}{\partial \rho} = -2 \tag{426}$$

For α being the spacecraft transponder delay for a radio transponder time delay measurement we have

$$\frac{\partial \Delta t}{\partial \alpha} = 1 \tag{427}$$

The transponder delay is not really a constant, but depends on temperature, signal strength, etc. The transponder delay must either be calibrated in advance and/or some model more complicated than just a constant delay must be employed with parameters to be determined in fitting to data. The expressions for the partial derivatives with respect to these parameters are straightforward; the difficult task is to construct a valid model.

For $\alpha = \lambda$ being an ad hoc parameter multiplying the general relativity effect (228) we have

$$\frac{\partial \Delta t}{\partial \lambda} = \Delta t_{rel} \Big|_{\lambda=1} \tag{428}$$

For $\alpha = \bar{\varepsilon}$ being the number of electrons per cubic centimeter at one astronomical unit from the sun in expressions (230) and (231) for the effect of the interplanetary media we have

$$\frac{\partial \Delta t}{\partial \bar{\varepsilon}} = \Delta t_{plasma} \Big|_{\bar{\varepsilon}=1} \tag{429}$$

Actually, all the above expressions should be multiplied by (1 - fractional frequency offset of UTC from A1) as in (237). However, this frequency offset is zero after 1.0 January 1972 and it is small before 1972, so that it can be ignored in the partial derivatives since they only have to be known to perhaps 4 decimal places.

VIII-C. Doppler Shift

The partial derivatives of the phase delay $\Delta\tau$ are the same as for the group delay Δt except for the sign changes in (239). The partial derivatives of the phase delay doppler observable is by (234)

$$\frac{\partial \Delta f}{\partial \beta} = \frac{f}{t_c}\left(\frac{\partial \Delta\tau_a}{\partial \beta} - \frac{\partial \Delta\tau_b}{\partial \beta}\right) \tag{430}$$

Since the partial derivatives are not needed to more than about 4 place accuracy, we need only consider the first order terms in expressions (243) to (251) for the instantaneous doppler. To first order we have

$$\Delta f = -f \sum_{i=1}^{2} \frac{\vec{r}_i \cdot \dot{\vec{r}}_i}{|\vec{r}_i|} \tag{431}$$

so that

$$\frac{\partial \Delta f}{\partial \beta} = -f \sum_{i=1}^{2} \frac{1}{|\vec{r}_i|} \left[\frac{\partial \vec{r}_i}{\partial \beta} \cdot \dot{\vec{r}}_i + \vec{r}_i \cdot \frac{\partial \dot{\vec{r}}_i}{\partial \beta} - \frac{\vec{r}_i \cdot \dot{\vec{r}}_i}{|\vec{r}_i|^2}\, \vec{r}_i \cdot \frac{\partial \vec{r}_i}{\partial \beta}\right] \tag{432}$$

VIII-D. Angular Measurements

In the notation of Section VII-D, the vector $\vec{q}$ differs from the vector $\vec{r}_1$ by the aberration affect (259), (261) or (263) and by other small corrections. Thus to the accuracy to which we have to calculate the partial derivatives we can assume that

$$\frac{\partial \vec{q}}{\partial \beta} \approx \frac{\partial \vec{r}_1}{\partial \beta} \tag{433}$$

VIII-D-1. Azimuth-Elevation

By (272) we have

$$\frac{\partial \vec{q}_p}{\partial \beta} = \frac{\partial \vec{q}}{\partial \beta} - \left(\frac{\partial \vec{q}}{\partial \beta} \cdot \vec{N}\right) \vec{N} \tag{434}$$

and by (273) and (274) we have

$$\frac{\partial\ (\text{elevation})}{\partial \beta} = \frac{1}{|\vec{q}| \left[1 - \left(\frac{\vec{N} \cdot \vec{q}}{|\vec{q}|}\right)^2\right]^{1/2}} \left[\vec{N} \cdot \frac{\partial \vec{q}}{\partial \beta} - \frac{\vec{N} \cdot \vec{q}}{|\vec{q}|^2} \vec{q} \cdot \frac{\partial \vec{q}}{\partial \beta}\right] \tag{435}$$

$$\frac{\partial\ (\text{azimuth})}{\partial \beta} = \frac{1}{(\vec{q}_p \cdot \vec{M})^2 + \left[(\vec{q}_p \times \vec{M}) \cdot \vec{N}\right]^2}$$

$$\left[(\vec{q}_p \cdot \vec{M})\left(\frac{\partial \vec{q}_p}{\partial \beta} \times \vec{M}\right) \cdot \vec{N}\right.$$

$$\left. - \left(\frac{\partial \vec{q}_p}{\partial \beta} \cdot \vec{M}\right)\left(\vec{q}_p \times \vec{M}\right) \cdot \vec{N}\right] \tag{436}$$

VIII-D-2. Against Star Background

For photographic observations we have by (278) and (279)

$$\frac{\partial\delta}{\partial\beta} = \frac{1}{|\vec{q}|\left[1-\left(\frac{q^3}{|\vec{q}|}\right)^2\right]^{1/2}}\left[\frac{\partial q^3}{\partial\beta} - \frac{q^3}{|\vec{q}|^2}\,\vec{q}\cdot\frac{\partial\vec{q}}{\partial\beta}\right] \tag{437}$$

$$\frac{\partial\alpha}{\partial\beta} = \frac{1}{(q^1)^2+(q^2)^2}\left[q^1\frac{\partial q^2}{\partial\beta} - q^2\frac{\partial q^1}{\partial\beta}\right] \tag{438}$$

The partial derivatives with respect to the infinitesimal rotations $(d\Omega_1, d\Omega_2, d\Omega_3)$ are very easily derived from their effect (284) on right ascension and declination.

VIII-D-3. In Satellite Reference Frame

VIII-D-3a. Approximately Inertial Frames

For satellite based observations let the components of the vector $\vec{q}$ in the satellite fixed frame be (q_*^1, q_*^2, q_*^3). The components referred to the mean equinox and equator of 1950.0 are of course (q^1, q^2, q^3). By (285) and (286) we have

$$\left.\begin{aligned} q_*^k &= \sum_{\ell=1}^{3} D_{k\ell}\, q^\ell \\ q^k &= \sum_{\ell=1}^{3} D_{\ell k}\, q_*^\ell \end{aligned}\right\} \quad k = 1, 2, 3 \tag{439}$$

so that

$$\frac{\partial q_*^k}{\partial\beta} = \sum_{\ell=1}^{3}\frac{\partial D_{\ell k}}{\partial\beta}\, q^k + \sum_{\ell=1}^{3} D_{\ell k}\frac{\partial q^\ell}{\partial\beta} \qquad k = 1,2,3 \tag{440}$$

For the spacecraft based right ascension and declination in a slowly varying spacecraft fixed reference system we have by (288) and (289)

$$\frac{\partial\delta}{\partial\beta} = \frac{1}{|\vec{q}|\left[1-\left(\frac{q_*^3}{|\vec{q}|}\right)^2\right]^{1/2}}\left[\frac{\partial q_*^3}{\partial\beta} - \frac{q_*^3}{|\vec{q}|}\sum_{\ell=1}^{3} q_*^{\ell}\frac{\partial q_*^{\ell}}{\partial\beta}\right] \tag{441}$$

$$\frac{\partial\alpha}{\partial\beta} = \frac{1}{(q_*^1)^2+(q_*^2)^2}\left[q_*^1\frac{\partial q_*^2}{\partial\beta} - q_*^2\frac{\partial q_*^1}{\partial\beta}\right] \tag{442}$$

By (287) we have

$$\frac{\partial D_{jk}}{\partial\beta} = \frac{\partial D_{jk}}{\partial I}\frac{\partial I}{\partial\beta} + \frac{\partial D_{jk}}{\partial\Omega}\frac{\partial\Omega}{\partial\beta} + \frac{\partial D_{jk}}{\partial\omega}\frac{\partial\omega}{\partial\beta} \qquad j,\ k = 1,\ 2,\ 3 \tag{443}$$

where

$$\begin{aligned}
&\frac{\partial D_{11}}{\partial I} = \sin\Omega\, D_{31}, \quad \frac{\partial D_{12}}{\partial I} = \sin\Omega\, D_{32}, \quad \frac{\partial D_{13}}{\partial I} = \sin\Omega\cos I\\
&\frac{\partial D_{21}}{\partial I} = -\cos\Omega\, D_{31}, \quad \frac{\partial D_{22}}{\partial I} = -\cos\Omega\, D_{32}, \quad \frac{\partial D_{23}}{\partial I} = -\cos\Omega\cos I\\
&\frac{\partial D_{31}}{\partial I} = \sin\omega\cos I, \quad \frac{\partial D_{32}}{\partial I} = \cos\omega\cos I, \quad \frac{\partial D_{33}}{\partial I} = -\sin I
\end{aligned} \tag{444}$$

$$\begin{aligned}
&\frac{\partial D_{11}}{\partial\Omega} = -D_{21}, \quad \frac{\partial D_{12}}{\partial\Omega} = -D_{22}, \quad \frac{\partial D_{13}}{\partial\Omega} = -D_{23}\\
&\frac{\partial D_{21}}{\partial\Omega} = D_{11}, \quad \frac{\partial D_{22}}{\partial\Omega} = D_{12}, \quad \frac{\partial D_{23}}{\partial\Omega} = D_{13}\\
&\frac{\partial D_{31}}{\partial\Omega} = 0, \quad \frac{\partial D_{32}}{\partial\Omega} = 0, \quad \frac{\partial D_{33}}{\partial\Omega} = 0
\end{aligned} \tag{445}$$

$$\frac{\partial D_{11}}{\partial \omega} = D_{12}, \quad \frac{\partial D_{12}}{\partial \omega} = - D_{11}, \quad \frac{\partial D_{13}}{\partial \omega} = 0$$

$$\frac{\partial D_{21}}{\partial \omega} = D_{22}, \quad \frac{\partial D_{22}}{\partial \omega} = - D_{21}, \quad \frac{\partial D_{23}}{\partial \omega} = 0$$

$$\frac{\partial D_{31}}{\partial \omega} = D_{32}, \quad \frac{\partial D_{32}}{\partial \omega} = - D_{31}, \quad \frac{\partial D_{33}}{\partial \omega} = 0 \tag{446}$$

$\partial I/\partial \beta$, $2\Omega/\partial \beta$, $\partial \omega/\partial \beta$ will have obvious expressions if β is a parameter in a Taylor or Fourier series representation of I, Ω or ω analogous to (294).

VIII-D-3b. Approximately Earth Oriented Frames

For an approximately earth oriented satellite reference frame such as for LES-8 or LES-9, the partial derivatives of the pitch and roll angles are by (300) and (301)

$$\frac{\partial \delta_{\#}}{\partial \beta} = \frac{1}{|\vec{q}| \left[1 - \left(\frac{\vec{q} \cdot \vec{E}_1^{\#}}{|\vec{q}|} \right)^2 \right]^{1/2}} \left[\frac{\partial \vec{q}}{\partial \beta} \cdot \vec{E}_1^{\#} + \vec{q} \cdot \frac{\partial \vec{E}_1^{\#}}{\partial \beta} - \frac{\vec{q} \cdot \vec{E}_1^{\#}}{|\vec{q}|^2} \vec{q} \cdot \frac{\partial \vec{q}}{\partial \beta} \right] \tag{447}$$

$$\frac{\partial \alpha_{\#}}{\partial \beta} = \frac{1}{(\vec{q} \cdot \vec{E}_2^{\#})^2 + (\vec{q} \cdot \vec{E}_3^{\#})^2} \left[(\vec{q} \cdot \vec{E}_3^{\#}) \left(\frac{\partial \vec{q}}{\partial \beta} \cdot \vec{E}_2^{\#} + \vec{q} \cdot \frac{\partial \vec{E}_2^{\#}}{\partial \beta} \right) - (\vec{q} \cdot \vec{E}_2^{\#}) \left(\frac{\partial \vec{q}}{\partial \beta} \cdot E_3^{\#} + \vec{q} \cdot \frac{\partial \vec{E}_3^{\#}}{\partial \beta} \right) \right] \tag{448}$$

We have by (299)

$$\frac{\partial \vec{E}_1^{\,\#}}{\partial \beta} = \frac{\partial \vec{E}_1^{\,*}}{\partial \beta} + \left(\vec{E}_2^{\,*} \frac{\partial d\,\Omega_3}{\partial \beta} - \vec{E}_3^{\,*} \frac{\partial d\,\Omega_2}{\partial \beta} \right)$$

$$+ \left(d\,\Omega_3 \frac{\vec{E}_2^{\,*}}{\partial \beta} - d\,\Omega_2 \frac{\partial \vec{E}_3^{\,*}}{\partial \beta} \right.$$

$$\frac{\partial \vec{E}_2^{\,\#}}{\partial \beta} = \frac{\partial \vec{E}_2^{\,*}}{\partial \beta} + \left(-\vec{E}_1^{\,*} \frac{\partial d\,\Omega_3}{\partial \beta} + \vec{E}_3^{\,*} \frac{\partial d\,\Omega_1}{\partial \beta} \right)$$

$$+ \left(- d\,\Omega_3 \frac{\partial \vec{E}_1^{\,*}}{\partial \beta} + d\,\Omega_1 \frac{\partial \vec{E}_3^{\,*}}{\partial \beta} \right)$$

$$\frac{\partial \vec{E}_3^{\,\#}}{\partial \beta} = \frac{\partial \vec{E}_3^{\,*}}{\partial \beta} + \left(\vec{E}_1^{\,*} \frac{\partial d\,\Omega_2}{\partial \beta} - \vec{E}_2^{\,*} \frac{\partial d\,\Omega_1}{\partial \beta} \right)$$

$$+ \left(d\,\Omega_2 \frac{\partial \vec{E}_1^{\,*}}{\partial \beta} - d\,\Omega_1 \frac{\partial \vec{E}_2^{\,*}}{\partial \beta} \right) \tag{449}$$

and by (298) we have

$$\frac{\partial \vec{E}_k^{\,*}}{\partial \beta} = \sum_{j=1}^{3} D_{jk} \frac{\partial \vec{E}_j}{\partial \beta} + \sum_{j=1}^{3} \frac{\partial D_{jk}}{\partial \beta} \vec{E}_j \qquad k = 1,\ 2,\ 3 \tag{450}$$

For partial derivatives with respect to the quantities P, Q, $\tilde{\omega}$ defined in terms of the Euler angles I, Ω, ω by (292), we have by (293)

$$\sigma = \frac{1 - \sqrt{1 - (P^2 + Q^2)}}{P^2 + Q^2}$$

$$\frac{\partial \sigma}{\partial P} = \frac{1}{P^2 + Q^2} - \frac{2P}{(P^2 + Q^2)^2} \left[1 - \frac{1}{\sqrt{1 - (P^2 + Q^2)}} \right]$$

$$\frac{\partial \sigma}{\partial Q} = \frac{1}{P^2 + Q^2} - \frac{2Q}{(P^2 + Q^2)^2} \left[1 - \frac{1}{\sqrt{1 - (P^2 + Q^2)}} \right] \tag{451}$$

$$\frac{\partial D_{11}}{\partial P} = (Q \sin \tilde{\omega} - 2P \cos \tilde{\omega}) \sigma + P (Q \sin \tilde{\omega} - P \cos \tilde{\omega}) \frac{\partial \sigma}{\partial P}$$

$$\frac{\partial D_{12}}{\partial P} = (2 P \sin \tilde{\omega} + Q \cos \tilde{\omega}) \sigma + P (P \sin \tilde{\omega} + Q \cos \tilde{\omega}) \frac{\partial \sigma}{\partial P}$$

$$\frac{\partial D_{13}}{\partial P} = 1$$

$$\frac{\partial D_{21}}{\partial P} = Q \cos \tilde{\omega} \ \sigma - Q (Q \sin \tilde{\omega} - P \cos \tilde{\omega}) \frac{\partial \sigma}{\partial P}$$

$$\frac{\partial D_{22}}{\partial P} = - Q \sin \tilde{\omega} \sigma - Q (P \sin \tilde{\omega} + Q \cos \tilde{\omega}) \frac{\partial \sigma}{\partial P}$$

$$\frac{\partial D_{23}}{\partial P} = 0$$

$$\frac{\partial D_{31}}{\partial P} = - \cos \tilde{\omega}$$

$$\frac{\partial D_{32}}{\partial P} = \sin \tilde{\omega}$$

$$\frac{\partial D_{33}}{\partial P} = \frac{-2P}{\sqrt{1 - (P^2 + Q^2)}} \tag{452}$$

$$\frac{\partial D_{11}}{\partial Q} = P \sin \tilde{\omega} \ \sigma + P (Q \sin \tilde{\omega} - P \cos \tilde{\omega}) \frac{\partial \sigma}{\partial Q}$$

$$\frac{\partial D_{12}}{\partial Q} = P \cos \tilde{\omega} \ \sigma + P (P \sin \tilde{\omega} + Q \cos \tilde{\omega}) \frac{\partial \sigma}{\sigma Q}$$

$$\frac{\partial D_{13}}{\partial Q} = 0$$

$$\frac{\partial D_{21}}{\partial Q} = - (2 Q \sin \tilde{\omega} - P \cos \tilde{\omega}) \sigma - Q (Q \sin \tilde{\omega} - P \cos \tilde{\omega}) \frac{\partial \sigma}{\partial Q}$$

$$\frac{\partial D_{22}}{\partial Q} = - (P \sin \tilde{\omega} + 2Q \cos \tilde{\omega}) \sigma - Q (P \sin \tilde{\omega} + Q \cos \tilde{\omega}) \frac{\partial \sigma}{\partial Q}$$

$$\frac{\partial D_{23}}{\partial Q} = -1$$

$$\frac{\partial D_{31}}{\partial Q} = \sin \tilde{\omega}$$

$$\frac{\partial D_{32}}{\partial Q} = \cos \tilde{\omega}$$

$$\frac{\partial D_{33}}{\partial Q} = \frac{- 2Q}{\sqrt{1 - (P^2 + Q^2)}} \tag{453}$$

$$\frac{\partial D_{11}}{\partial \tilde{\omega}} = D_{12}, \quad \frac{\partial D_{12}}{\partial \tilde{\omega}} = - D_{11}, \quad \frac{\partial D_{13}}{\partial \tilde{\omega}} = 0$$

$$\frac{\partial D_{21}}{\partial \tilde{\omega}} = D_{22}, \quad \frac{\partial D_{22}}{\partial \tilde{\omega}} = -D_{21}, \quad \frac{\partial D_{13}}{\partial \tilde{\omega}} = 0$$

$$\frac{\partial D_{31}}{\partial \tilde{\omega}} = D_{32}, \quad \frac{\partial D_{32}}{\partial \tilde{\omega}} = -D_{31}, \quad \frac{\partial D_{33}}{\partial \tilde{\omega}} = 0 \tag{454}$$

Finally, by (291) we have

$$\frac{\partial \vec{E}_1}{\partial \beta} = \frac{1}{|\vec{x}_{1e} \times \dot{\vec{x}}_{1e}|} \left[\frac{\partial \vec{x}_{1e}}{\partial \beta} \times \dot{\vec{x}}_{1e} + \vec{x}_{1e} \times \frac{\partial \dot{\vec{x}}_{1e}}{\partial \beta} \right.$$

$$\left. - \frac{(\vec{x}_{1e} \times \dot{\vec{x}}_{1e})}{|\vec{x}_{1e} \times \dot{\vec{x}}_{1e}|^2} \cdot \left(\frac{\partial \vec{x}_{1e}}{\partial \beta} \times \dot{\vec{x}}_{1e} + \vec{x}_{1e} \times \frac{\partial \dot{\vec{x}}_{1e}}{\partial \beta} \right) \right] \tag{455}$$

$$\frac{\partial \vec{E}_2}{\partial \beta} = \frac{\partial \vec{E}_3}{\partial \beta} \times \vec{E}_1 + \vec{E}_3 \times \frac{\partial \vec{E}_1}{\partial \beta} \tag{456}$$

$$\frac{\partial E_3}{\partial \beta} = - \frac{1}{|\vec{x}_{1e}|} \left[\frac{\partial \vec{x}_{1e}}{\partial \beta} - \frac{\vec{x}_{1e}}{|x_{1e}|^2} \cdot \frac{\partial \vec{x}_{1e}}{\partial \beta} \right] \tag{457}$$

VIII-D-4. Meridian Circle

For our discussion of the partial derivatives of meridian circle observations we need the following consequence of (305):

$$\frac{\partial w^k}{\partial \beta} = \sum_{\ell=1}^{3} (NP)_{k\ell} \frac{\partial q^\ell}{\partial \beta} + \sum_{\ell=1}^{3} \frac{\partial (NP)_{k\ell}}{\partial \beta} q^\ell \qquad k = 1, 2, 3 \tag{458}$$

We shall also need

$$\dot{w}^k = \sum_{\ell=1}^{3} (NP)_{k\ell} \dot{q}^\ell \qquad k = 1, 2, 3$$

$$\dot{\vec{q}} \approx \dot{\vec{r}}_1 \tag{459}$$

Equation (309) for correcting the time of meridian crossing implies that at the instant of meridian crossing

$$\alpha = \Theta - \theta \tag{460}$$

where α is the right ascension referred to the true equinox and equator of date, Θ the true sidereal time and θ the west longitude of the observatory. Thus by Eqs. (65), (66) and (67) relating the true sidereal time and UT1 time, we have

$$\frac{\partial \alpha}{\partial \beta} = \frac{d\,\Theta_o}{dt} \frac{\partial UT\,1}{\partial \beta} \tag{461}$$

since we can ignore the partial derivatives of $\overline{\Theta}_o$ and $\Delta\,\psi \cos \epsilon$.
Let us write

$$CT = UT1 + \Delta T \tag{462}$$

so that

$$\frac{\partial CT}{\partial \beta} = \frac{\partial UT\,1}{\partial \beta} + \frac{\partial \Delta T}{\partial \beta}$$

$$= \frac{1}{d\,\Theta_o/dt} \frac{\partial \alpha}{\partial \beta} + \frac{\partial \Delta T}{\partial \beta} \tag{463}$$

Taking the partial derivative of (306) and (307) we obtain

$$\frac{\partial \delta}{\partial \beta} = \frac{1}{|\vec{w}|\left[1 + \left(\frac{w^3}{|\vec{w}|}\right)^2\right]^{1/2}} \left[\frac{\partial w^3}{\partial \beta} + \dot{w}^3 \frac{\partial CT}{\partial \beta}\right.$$

$$\left. - \frac{w^3}{|\vec{w}|^2} \sum_{\ell=1}^{3} w^\ell \left(\frac{\partial w^\ell}{\partial \beta} + \dot{w}^\ell \frac{\partial CT}{\partial \beta}\right)\right] \tag{464}$$

$$\frac{\partial \alpha}{\partial \beta} = \frac{1}{(w^1)^2 + (w^2)^2} \left[w^1 \left(\frac{\partial w^2}{\partial \beta} + \dot{w}^2 \frac{\partial CT}{\partial \beta}\right)\right.$$

$$\left. - w^2 \left(\frac{\partial w^1}{\partial \beta} + \dot{w}^1 \frac{\partial CT}{\partial \beta}\right)\right] \tag{465}$$

where by (463) and (465)

$$\frac{\partial CT}{\partial \beta} = \left\{\left[w^1 \frac{\partial w^2}{\partial \beta} - w^2 \frac{\partial w^1}{\partial \beta}\right] + \left[(w^1)^2 + (w^2)^2\right] \frac{\partial \Delta t}{\partial \beta} \frac{d\Theta_o}{dt}\right\}$$

$$\cdot \left\{\left[(w^1)^2 + (w^2)^2\right] \frac{d\Theta_o}{dt} - \left[w^1 \dot{w}^2 - w^2 \dot{w}^1\right]\right\}^{-1} \tag{466}$$

with $d\Theta_o/dt$ being given by (68).

Formulas (464) and (465) for the partial derivatives of meridian circle observations involve the velocity $\dot{\vec{w}}$ because the time of the observation is specified as the instant of meridian crossing. We had originally programed formulas analogous to (437) and (438) for meridian circle partial derivatives, but in checking them by the difference method, we found we had to use the more rigorous formulas (464) and (465). This was especially true for lunar observations.

The meridian circle partial derivatives with respect to the CT-UT1 parameters in Section III-E are non-zero by virtue of the term $\partial \Delta T/\partial \beta$ in (466). The partial derivatives with respect to the precession parameters in Sections IV-E-1 and IV-E-2 are non-zero by virtue of the term $\partial (NP)_{k\ell}/\partial \beta$ in (458).

The expressions for the partial derivatives of right ascension and declination with respect to the equinox, equator and declination biases $\Delta\gamma$, $\Delta\phi$, $\Delta\delta$ follow trivially from (313). Those with respect to the phase correction coefficients $\beta = a_n$ in (314) are given by (464) and (465) with

$$\frac{\partial \vec{w}}{\partial a_n} = \frac{\partial \Delta \vec{\rho}}{\partial a_n} \tag{467}$$

where $\partial \Delta \vec{\rho}/\partial a_n$ can be calculated from (314) in not so trivially a manner.

VIII-E. Long Baseline Interferometer

By (316), (317), and (324) the partial derivative of an interferometer differential delay measurement is to sufficient accuracy

$$\frac{\partial \Delta t_{c*}}{\partial \beta} \approx \frac{\partial \Delta t}{\partial \beta} + \frac{\partial a_o}{\partial \beta} + \frac{\partial a_1}{\partial \beta}(t - t_o) \tag{468}$$

For a quasar observation we have by (322)

$$\frac{\partial \Delta t}{\partial \beta} = - \frac{\partial \vec{x}_{po}}{\partial \beta} \cdot \vec{d} - \vec{x}_{po} \cdot \left(\frac{\partial \vec{x}_{20}(t_2)}{\partial \beta} - \frac{\partial \vec{x}_{10}(t_1)}{\partial \beta} \right) \tag{469}$$

and for an observation of a noise source within the solar system we have by (339) through (345)

$$\frac{\partial \Delta t}{\partial \beta} = \frac{\vec{r}_1}{|\vec{r}_1|} \cdot \frac{\partial \vec{r}_1}{\partial \beta} - \frac{\vec{r}_2}{|\vec{r}_2|} \cdot \frac{\partial \vec{r}_2}{\partial \beta} \tag{470}$$

By (337), (338) and (346) the partial derivatives of the differential delay rate measurement in the two cases are

$$\frac{\partial \Delta \dot{t}_{c*}}{\partial \beta} \approx \frac{\partial \Delta \dot{t}}{\partial \beta} + \frac{\partial a_1}{\partial \beta} \tag{471}$$

$$\frac{\partial \Delta \dot{t}}{\partial \beta} = - \frac{\partial \vec{x}_{po}}{\partial \beta} \cdot \left[\dot{\vec{x}}_{20}(t_2) - \dot{\vec{x}}_{10}(t_1) \right] - \vec{x}_{po} \cdot \left[\frac{\partial \dot{\vec{x}}_{20}(t_2)}{\partial \beta} - \frac{\partial \dot{\vec{x}}_{10}(t_1)}{\partial \beta} \right] \tag{472}$$

$$\frac{\partial \Delta \dot{t}}{\partial \beta} = \frac{1}{|\vec{r}_1|} \left[\frac{\partial \vec{r}_1}{\partial \beta} \cdot \dot{\vec{r}}_1 + \vec{r}_1 \cdot \frac{\partial \dot{\vec{r}}_1}{\partial \beta} - \frac{1}{|\vec{r}_1|^2} \left(\vec{r}_1 \cdot \frac{\partial \vec{r}_1}{\partial \beta} \right) \left(\vec{r}_1 \cdot \dot{\vec{r}}_1 \right) \right]$$

$$- \frac{1}{|\vec{r}_2|} \left[\frac{\partial \vec{r}_2}{\partial \beta} \cdot \dot{\vec{r}}_2 + \vec{r}_2 \cdot \frac{\partial \dot{\vec{r}}_2}{\partial \beta} - \frac{1}{|r_2|^2} \left(\vec{r}_2 \cdot \frac{\partial \vec{r}_2}{\partial \beta} \right) \left(\vec{r}_2 \cdot \dot{\vec{r}}_2 \right) \right] \tag{473}$$

VIII-F. Transits and Occultations

VIII-F-1. Transits of Mercury

Let us consider a transit of Mercury as discussed in Section VII-F-1. Equations (347) and (365) give the implicit dependence of the observed universal time $t_{3*} = t_3 - \Delta t$ of transit on the unknown parameters $\beta = (\beta^1, \ldots, \beta^n)$ which affect the motion of the earth and Mercury and the unknown parameters $\alpha = (\alpha^1, \ldots, \alpha^m)$ which affect the

difference between coordinate and universal times (see Section III-E). Let us write this implicit dependence as

$$F\left[\vec{r}_e\left(\beta, t_3(t_{3*}, \alpha)\right), \vec{r}_m\left(\beta, t_2(\vec{r}_e, \vec{r}_m, t_3(t_{3*}, \alpha)\right), \rho_s, \rho_m\right] = 0 \tag{474}$$

where by (365)

$$F \equiv r_e(r_m^2 - r_{mx}^2)^{1/2} - r_e(\rho_s - \rho_m) + r_{mx}\rho_s \tag{475}$$

Let λ be one of the parameters ρ_s, ρ_m, $(\alpha^1, \ldots, \alpha^m)$ or $(\beta^1, \ldots, \beta^n)$. Holding all the other parameters fixed we may view the functional dependence (474) as

$$F(t_{3*}, \lambda) = 0 \tag{476}$$

Differentiating (476) with respect to λ we see that

$$\frac{\partial t_{3*}}{\partial \lambda} = -\frac{\partial F/\partial \lambda}{\partial F/\partial t_{3*}} \tag{477}$$

By (475) the following relations hold:

$$\frac{\partial F}{\partial r_e} = \left(r_m^2 - r_{mx}^2\right)^{1/2} - (\rho_s - \rho_m)$$

$$\frac{\partial F}{\partial r_m} = \frac{r_e r_m}{\left(r_m^2 - r_{mx}^2\right)^{1/2}}$$

$$\frac{\partial F}{\partial r_{mx}} = -\frac{r_e r_{mx}}{\left(r_m^2 - r_{mx}^2\right)^{1/2}} + \rho_s$$

$$\frac{\partial F}{\partial \rho_s} = -r_e + r_{mx}$$

$$\frac{\partial F}{\partial \rho_m} = r_e \tag{478}$$

By (347) we have

$$\frac{\partial F}{\partial t_{3*}} = \frac{\partial F}{\partial t_3}, \quad \frac{\partial \vec{r}_e}{\partial t_{3*}} = \dot{\vec{r}}_e, \quad \frac{\partial \vec{r}_m}{\partial t_{3*}} \approx \dot{\vec{r}}_m \tag{479}$$

$$\frac{\partial F}{\partial \alpha^j} = \frac{\partial F}{\partial t_3}\frac{\partial \Delta t}{\partial \alpha^j}, \quad \frac{\partial \vec{r}_e}{\partial \alpha} = \dot{\vec{r}}_e \frac{\partial \Delta t}{\partial \alpha^j}, \quad \frac{\partial \vec{r}_m}{\partial \alpha^j} \approx \dot{\vec{r}}_m \frac{\partial \Delta t}{\partial \alpha^j} \tag{480}$$

where α^j is one of the $(\alpha^1, \ldots, \alpha^m)$ upon which Δt depends. We further have

$$\frac{\partial r_e}{\partial t_3} = \hat{r}_e \cdot \dot{\vec{r}}_e \tag{481}$$

$$\frac{\partial r_m}{\partial t_3} \approx \hat{r}_m \cdot \dot{\vec{r}}_m$$

$$\frac{\partial r_{mx}}{\partial t_3} \approx \frac{\dot{\vec{r}}_e \cdot \vec{r}_m + \vec{r}_e \cdot \dot{\vec{r}}_m - (\hat{r}_e \cdot \vec{r}_m)(\hat{r}_e \cdot \dot{\vec{r}}_e)}{r_e}$$

$$\frac{\partial r_e}{\partial \lambda} = \hat{r}_e \cdot \frac{\partial \vec{r}_e}{\partial \lambda}$$

$$\frac{\partial r_m}{\partial \lambda} = \hat{r}_m \cdot \frac{\partial \vec{r}_m}{\partial \lambda}$$

$$\frac{\partial r_{mx}}{\partial \lambda} = \frac{1}{r_e}\left[\vec{r}_m - (\hat{r}_e \cdot \vec{r}_m)\hat{r}_e\right] \cdot \frac{\partial \vec{r}_e}{\partial \lambda} + \hat{r}_e \cdot \frac{\partial \vec{r}_m}{\partial \lambda}$$

Thus we see that

$$\frac{\partial F}{\partial t_{3*}} = \left[\left(r_m^{\,2} - r_{mx}^{\,2} \right)^{1/2} - (\rho_s - \rho_m) \right] \left(\hat{r}_e \cdot \vec{r}_e \right)$$

$$+ \frac{r_e}{\left(r_m^{\,2} - r_{mx}^{\,2} \right)^{1/2}} \left(\vec{r}_m \cdot \dot{\vec{r}}_m \right)$$

$$+ \left[\rho_s - \frac{r_e\, r_{mx}}{\left(r_m^{\,2} - r_{mx}^{\,2} \right)^{1/2}} \right] \left[\frac{\dot{\vec{r}}_e \cdot \vec{r}_m + \vec{r}_e \cdot \dot{\vec{r}}_m - (\hat{r}_e \cdot \vec{r}_m)(\hat{r}_e \cdot \dot{\vec{r}}_e)}{r_e} \right] \tag{482}$$

The formula for $\partial t_{3*}/\partial\lambda$ with $\lambda = \rho_s$ or $\lambda = \rho_m$ follows from (477), (478) and (482). If $\lambda = \alpha^j$ ($j = 1, \ldots, m$), we see by (477), (479), and (480) that

$$\frac{\partial t_{3*}}{\partial \alpha^j} = - \frac{\partial \Delta t}{\partial \alpha^j} \tag{483}$$

If $\lambda = \beta^j$ ($j = 1, \ldots, n$), the value of $\partial t_{3*}/\partial \lambda$ is given by (477), (482) and the following:

$$\frac{\partial F}{\partial \lambda} = \left[\left(r_m^{\,2} - r_{mx}^{\,2} \right)^{1/2} - (\rho_s - \rho_m) \right] \hat{r}_e \cdot \frac{\partial \vec{r}_e}{\partial \lambda}$$

$$+ \frac{r_e}{\left(r_m^{\,2} - r_{mx}^{\,2} \right)^{1/2}} \left(\vec{r}_m \cdot \frac{\partial \vec{r}_m}{\partial \lambda} \right)$$

$$+ \left[\rho_s - \frac{r_e\, r_{mx}}{\left(r_m^{\,2} - r_{mx}^{\,2} \right)^{1/2}} \right] \left\{ \vec{r}_e \cdot \frac{\partial \vec{r}_m}{\partial \lambda} + \frac{1}{r_e} \left[\vec{r}_m - (\hat{r}_e \cdot \vec{r}_m) \hat{r}_e \right] \cdot \frac{\partial \vec{r}_e}{\partial \lambda} \right\} \tag{484}$$

If $\lambda = \beta^j$ is an initial condition of the earth-moon barycenter orbit, then $\partial \vec{r}_m/\partial\lambda = \vec{0}$, and if $\lambda = \beta^j$ is an initial condition of the Mercury orbit then $\partial \vec{r}_e/\partial \lambda = \vec{0}$. $\partial \vec{r}_e/\partial\lambda$ and $\partial \vec{r}_m/\partial\lambda$ are both non-zero only if $\lambda = \beta^j$ is a parameter, such as a planetary mass,

which affects both orbits.

The above derivation of partial derivatives applies for internal contacts. For external contacts, ρ_m must be replaced everywhere by $-\rho_m$ and $(\partial F/\partial \rho_m)$ by $-(\partial F/\partial \rho_m)$.

VIII-F-2. Stellar Occultations

We now consider the stellar occultation observations discussed in Section VII-F-2. By (347) and (397) the implicit functional relationship between the universal time t_{3*} of occultation, the radius of the body ρ_b, the parameters $\beta = (\beta^1, \ldots, \beta^n)$ upon which orbital motion depends, the parameters $\alpha = (\alpha^1, \ldots, \alpha^m)$ upon which $\Delta t = t_3 - t_{3*}$ depends and the parameters $\gamma = (\gamma_1, \ldots, \gamma^q)$ upon which star coordinates depend is

$$F\left(\vec{r}_b(\beta, t_3(t_{3*}, \alpha)), \vec{r}_*(\gamma), \rho_b\right) = 0 \tag{485}$$

where

$$F \equiv r_b(1 - r_{*x}^2)^{1/2} - \rho_b r_{*x} \tag{486}$$

By (485) we have

$$\frac{\partial F}{\partial r_b} = (1 - r_{*x}^2)^{1/2}$$

$$\frac{\partial F}{\partial r_{*x}} = - r_b r_{*x}(1 - r_{*x}^2)^{1/2} - \rho_b$$

$$\frac{\partial F}{\partial \rho_b} = - r_{*x} \tag{487}$$

By (347) we have

$$\frac{\partial F}{\partial t_{3*}} = \frac{\partial F}{\partial t_3}, \quad \frac{\partial \vec{r}_b}{\partial t_{3*}} \approx \dot{\vec{r}}_b, \quad \frac{\partial \vec{r}_*}{\partial t_{3*}} = \vec{0} \tag{488}$$

$$\frac{\partial F}{\partial \alpha^j} = \frac{\partial F}{\partial t_3} \frac{\partial \Delta t}{\partial \alpha^j}, \quad \frac{\partial \vec{r}_b}{\partial \alpha} \approx \dot{\vec{r}}_b \frac{\partial \Delta t}{\partial \alpha^j}, \quad \frac{\partial \vec{r}_*}{\partial \alpha^j} = \vec{0} \tag{489}$$

We further have

$$\frac{\partial r_b}{\partial t_3} \approx \hat{r}_b \cdot \dot{\vec{r}}_b$$

$$\frac{\partial r_*}{\partial t_3} = 0$$

$$\frac{\partial r_{*x}}{\partial t_3} = \frac{\dot{\vec{r}}_b \cdot \vec{r}_* - (\hat{r}_b \cdot \vec{r}_*)(\hat{r}_b \cdot \dot{\vec{r}}_b)}{r_b} \tag{490}$$

If λ is one of the unknown parameters, we have

$$\frac{\partial r_b}{\partial \lambda} = \hat{r}_b \cdot \frac{\partial \vec{r}_b}{\partial \lambda}$$

$$\frac{\partial r_*}{\partial \lambda} = \vec{r}_* \cdot \frac{\partial \vec{r}_*}{\partial \lambda}$$

$$\frac{\partial r_{*x}}{\partial \lambda} = \frac{1}{r_b} \left[\vec{r}_* - (\hat{r}_b \cdot \vec{r}_*)\hat{r}_b\right] \cdot \frac{\partial \vec{r}_b}{\partial \lambda} + \hat{r}_b \cdot \frac{\partial \vec{r}_*}{\partial \lambda} \tag{491}$$

Next, we have

$$\frac{\partial F}{\partial t_{3*}} = (1 - r_{*x}^2)(\hat{r}_b \cdot \vec{r}_b) - \left[r_b r_{*x}(1 - r_{*x})^{1/2} + \rho_b\right] \frac{\dot{\vec{r}}_b \cdot \vec{r}_* - (\hat{r}_b \cdot \vec{r}_*)(\hat{r}_b \cdot \dot{\vec{r}}_b)}{r_b} \tag{492}$$

The formula for $\partial t_{3*}/\partial \rho_b$ follows from (477), (487) and (492). By (477), (488), and (489) we obtain

$$\frac{\partial t_{3*}}{\partial \alpha^j} = - \frac{\partial \Delta t}{\partial \alpha^j} \tag{493}$$

where α^j (j = 1, ..., m) is one of the parameters upon which the difference $\Delta t = t_3 - t_{3*}$ between coordinate and universal times depends. For λ one of $(\beta^1, \ldots, \beta^n)$ or $(\gamma^1, \ldots, \gamma^q)$, we have

$$\frac{\partial F}{\partial \lambda} = \left(1 - r_{*x}^2\right)^{1/2} \left(\hat{r}_b \cdot \frac{\partial \vec{r}_b}{\partial \lambda}\right) - \left[r_b r_{*x} \left(1 - r_{*x}^2\right)^{1/2} + \rho_b\right] \left\{\frac{1}{r_b}\left[\vec{r}_* - \left(\hat{r}_b \cdot \vec{r}_*\right)\hat{r}_b\right] \cdot \frac{\partial \vec{r}_b}{\partial \lambda} + \hat{r}_b \cdot \frac{\partial \vec{r}_*}{\partial \lambda}\right\} \tag{494}$$

and the formula for $\partial t_{3*}/\partial \lambda$ follows from (477), (492) and (494).

IX. NUMERICAL TECHNIQUES

IX-A. Numerical Integration

At the present time we have programmed three techniques for numerically integrating ordinary differential equations in PEP: (1) Nordsieck variable step size, (2) Adams-Moulton constant step size and (3) Second Sum constant step size. The Nordsieck technique is self starting and chooses its integration step to retain stability and accuracy. The other methods call the Nordsieck routines for starting. The output of these methods (1), (2) and (3) is at constant tabular intervals, with the option in method (1) of having output each integration step at variable tabular intervals. The documentation of the formulas used in these integration methods is contained in Refs. 27 and 28. Here, we content ourselves with some general comments.

The ordinary differential equations that are numerically integrated in PEP are the equations of motion and the variational equations for the partial derivatives of motion with respect to the various parameters. In the following any statement we make regarding motion applies equally well to the partial derivatives of motion.

The numerical integration step size is smaller than the output tabular interval in the constant tabular interval case, since stepping ahead is more sensitive than performing a central difference interpolation after the fact. The integration and output step sizes are chosen to give the necessary accuracy with Everett eighth difference position and velocity interpolation when processing observations in PEP.

The Nordsieck integration technique programmed in PEP predicts ahead using a fifth degree approximating polynomial whose coefficients are approximations to derivatives of the function being integrated. In the variable output tabular interval option the position, velocity, acceleration and jerk are written out at the end of each step, whereas in the constant output tabular interval option only the position and velocity are written out. The first three quantities are exact, but the jerk, being a coefficient in the integrating polynomial approximating the time derivative of acceleration tends to lag behind the true value. Two point, second derivative Hermite interpolation is used in processing observations with a variable tabular interval output. That is, when interpolating for position, the position, velocity and acceleration at the two surrounding tabular points are used and when interpolating for velocity the velocity,

acceleration and jerk at two surrounding tabular points are used. The accuracy of the jerk in the velocity interpolation is adequate. Actually, the interval for interpolation could have been larger than the interval of integration since a central interpolation is less sensitive than stepping ahead.

Note that the variable tabular interval interpolation and integration techniques both use a fifth degree polynomial. The constant tabular interval Everett interpolation uses a ninth degree polynomial coinciding with the values of the quantity being interpolated at 10 tabular points surrounding the instant of interest.

The Nordsieck variable output tabular interval integration method is very useful for highly eccentric satellites or planetary flybys where the integration step size can vary drastically. The Nordsieck method is also useful if there are sudden thrusts acting on a satellite. If a constant output tabular interval method is allowable, the constant step size Adams-Moultan and Second Sum methods are faster than the Nordsieck variable step size method. The Second Sum method, which takes advantage of the fact that the equations of motion are of second order, is the fastest of all.

Numerical integration can go both forward and backward from the initial epoch. If there is an error stop during an integration with output on magnetic tape, the integration can be check-point restarted at the point where it stopped using the position and velocity on the magnetic tape as initial conditions.

IX-B. Polynomial Interpolation

IX-B-1. Everett Interpolation

Let f(t) be a function, and suppose we have a table of its values $f_i = f(t_i)$ at equally spaced tabular points t_i. We define the even order differences for this tabulation by the inductive relations

$$\Delta_i^{o} = f_i$$

$$\Delta_i^{2n} = \Delta_{i+1}^{2n-2} - 2\,\Delta_i^{2n-2} + \Delta_{i-1}^{2n-2} \tag{495}$$

Let $h = t_{i+1} - t_i$ be the tabular interval and let $q = 1 - p$. Then the Everett interpolation polynomial

$$
\begin{aligned}
g(t_o+ph) = {} & p\,\Delta_1^{\,o} + \frac{(p+1)\,p\,(p-1)}{3!}\,\Delta_1^{\,2} \\
& + \frac{(p+2)\,(p+1)\,p\,(p-1)\,(p-2)}{5!}\,\Delta_1^{\,4} + \cdots \\
& + \frac{(p+n)\,(p+n-1)\cdots(p-n)}{(2n+1)!}\,\Delta_1^{\,2n} \\
& + q\,\Delta_o^{\,o} + \frac{(q+1)\,q\,(q-1)}{3!}\,\Delta_o^{\,2} \\
& + \frac{(q+2)\,(q+1)\,q\,(q-1)\,(q-2)}{5!}\,\Delta_o^{\,4} \\
& + \cdots + \frac{(q+n)\,(q+n-1)\cdots(q-n)}{(2n+1)!}\,\Delta_o^{\,2n}
\end{aligned}
\tag{496}
$$

satisfies $g(t_i) = f(t_i)$ for $i = -n, \ldots, n+1$. The equality $g(t) = f(t)$ holds for all t if f is a polynomial of degree $2n+1$. For $t_o \le t \le t_1$, the Everett interpolation value $g(t)$ can be made to represent the actual value $f(t)$ as accurately as desired by appropriate choice of tabular interval h and highest order of difference used $2n$ if f posseses derivatives up to order $2n+2$. See Ref. 29, p. 103.

In the Planetary Ephemeris Program (PEP), the tabular interval for each function to be interpolated is chosen so that the necessary accuracy can be obtained with Everett interpolation using eighth differences. The actual interpolation formula used in PEP is gotten by putting (496) in a form which is more efficient for use on an electronic computer. (The idea for the ensuing manipulations is due to W. C. Mason.) Namely, setting $n = 4$ in (496) we can write

$$
\begin{aligned}
g(t_o = hp) = {} & y_1^{\,1}p + y_1^{\,2}p^3 + y_1^{\,3}p^5 + y_1^{\,4}p^7 + y_1^{\,5}p^9 \\
& + y_o^{\,1}q + y_o^{\,2}q^3 + y_o^{\,3}q^5 + y_o^{\,4}q^7 + y_o^{\,5}q^9
\end{aligned}
\tag{497}
$$

where

$$\left.\begin{aligned}
y_i^{\,1} &= \Delta_i^{\,o} - \frac{1}{6}\Delta_i^{\,2} + \frac{1}{30}\Delta_i^{\,4} - \frac{1}{140}\Delta_i^{\,6} + \frac{1}{630}\Delta_i^{\,8} \\
y_i^{\,2} &= \frac{1}{6}\Delta_i^{\,2} - \frac{1}{24}\Delta_i^{\,4} + \frac{7}{720}\Delta_i^{\,6} - \frac{41}{18144}\Delta_i^{\,8} \\
y_i^{\,3} &= \frac{1}{120}\Delta_i^{\,4} - \frac{1}{360}\Delta_i^{\,6} + \frac{13}{17280}\Delta_i^{\,8} \\
y_i^{\,4} &= \frac{1}{5040}\Delta_i^{\,6} - \frac{1}{12096}\Delta_i^{\,8} \\
y_i^{\,5} &= \frac{1}{352880}\Delta_i^{\,8}
\end{aligned}\right\} \quad i = 0,\ 1 \tag{498}$$

From (495) it follows that

$$\begin{aligned}
\Delta_i^{\,o} &= f_i \\
\Delta_i^{\,2} &= f_{i+1} - 2f_i + f_{i-1} \\
\Delta_i^{\,4} &= f_{i+2} - 4f_{i+1} + 6f_i - 4f_{i-1} + f_{i-2} \\
\Delta_i^{\,6} &= f_{i+3} - 6f_{i+2} + 15f_{i+1} - 20f_i + 15f_{i-1} - 6f_{i-2} + f_{i-3} \\
\Delta_i^{\,8} &= f_{i+4} - 8f_{i+3} + 28f_{i+2} - 56f_{i+1} + 70f_i - 56f_{i-1} + 28f_{i-2} - 8f_{i-3} + f_{i-4}
\end{aligned} \tag{499}$$

so that

$$\begin{aligned}
y_i^{\,1} = \frac{563}{315} f_i - \frac{125}{252}(f_{i+1} + f_{i-1}) + \frac{38}{315}(f_{i+2} + f_{i-2}) \\
- \frac{5}{252}(f_{i+3} + f_{i-3}) + \frac{1}{630}(f_{i+4} + f_{i-4})
\end{aligned}$$

$$y_i^2 = -\frac{1213}{1296} f_i + \frac{785}{1296}(f_{i+1} + f_{i-1}) - \frac{529}{3240}(f_{i+2} + f_{i-2})$$

$$+ \frac{1261}{45360}(f_{i+3} + f_{i-3}) - \frac{41}{18144}(f_{i+4} + f_{i-4})$$

$$y_i^3 = \frac{1367}{8640} f_i - \frac{253}{2160}(f_{i+1} + f_{i-1}) + \frac{199}{4320}(f_{i+2} + f_{i-2})$$

$$- \frac{19}{2160}(f_{i+3} + f_{i-3}) + \frac{13}{17280}(f_{i+4} + f_{i-4})$$

$$y_i^4 = -\frac{59}{6048} f_i + \frac{23}{3024}(f_{i+1} + f_{i-1}) - \frac{53}{15120}(f_{i+2} + f_{i-2})$$

$$+ \frac{13}{15120}(f_{i+3} + f_{i-3}) - \frac{1}{12096}(f_{i+4} + f_{i-4})$$

$$y_i^5 = \frac{1}{5184} f_i - \frac{1}{6480}(f_{i+1} + f_{i-1}) + \frac{1}{12960}(f_{i+2} + f_{i-2})$$

$$- \frac{1}{45360}(f_{i+3} + f_{i-3}) + \frac{1}{362880}(f_{i+4} + f_{i-4}) \tag{500}$$

The electronic computer on which PEP is run carries along 16 decimal places in floating point computations. We therefore write the above formulas in the following form with decimal coefficients rather than rational coefficients:

$$y_i^1 = 1.7873015873015873\, f_i - 0.4960317460317460\,(f_{i+1} + f_{i-1})$$

$$+ 0.1206349206349206\,(f_{i+2} + f_{i-2}) - 0.1984126984126984 \times 10^{-1}(f_{i+3} + f_{i-3})$$

$$+ 0.1587301587301587 \times 10^{-2}\,(f_{i+4} + f_{i-4})$$

$$y_i^2 = -0.9359567901234568 f_i + 0.6057098765432098(f_{i+1}+f_{i-1})$$

$$- 0.1632716049382716(f_{i+2} + f_{i-2}) + 0.2779982363315696 \times 10^{-1}(f_{i+3}+f_{i-3})$$

$$- 0.2259700176366843 \times 10^{-2}(f_{i+4} + f_{i-4})$$

$$y_i^3 = 0.1582175925925926 f_i - 0.1171296296296296(f_{i+1}+f_{i-1})$$

$$+ 0.4606481481481481 \times 10^{-1}(f_{i+2}+f_{i-2}) - 0.8796296296296296 \times 10^{-2}$$

$$(f_{i+3} + f_{i-3})$$

$$+ 0.7523148148148148 \times 10^{-3}(f_{i+4}+ f_{i-4})$$

$$y_i^4 = -0.9755291005291005 \times 10^{-2} f_i + 0.7605820105820106 \times 10^{-2}(f_{i+1}+f_{i-1})$$

$$- 0.3505291005291005 \times 10^{-2}(f_{i+2}+f_{i-2}) + 0.8597883597883598 \times 10^{-3}$$

$$(f_{i+3} + f_{i-3})$$

$$- 0.8267195767195767 \times 10^{-4} (f_{i+4} + f_{i-4})$$

$$y_i^5 = 0.1929012345679012 \times 10^{-3} f_i - 0.1543209876543210 \times 10^{-3}(f_{i+1}+f_{i-1})$$

$$+ 0.7716049382716048 \times 10^{-4}(f_{i+2}+f_{i-2}) - 0.2204585537918871 \times 10^{-4}$$

$$(f_{i+3} + f_{i-3})$$

$$+ 0.275573192398589 \times 10^{-5} (f_{i+4} + f_{i-4}) \tag{501}$$

To find the value of f(t) for $t_o \le t \le t_1$ by interpolation, PEP determines the y_o^j and y_1^j from the above formulas and then uses formula (497) in the factored form

$$g(t) = g(t_o+ph) = p(y_1^{\,1} + p^2(y_1^{\,2} + p^2(y_1^{\,3} + p^2(y_1^{\,4}+p^2 y_1^{\,5}))))$$

$$+ q(y_o^{\,1} + q^2(y_o^{\,2}+q^2(y_o^{\,3}+q^2(y_o^{\,4} + q^2 y_o^{\,5})))) \tag{502}$$

It is easily seen that this procedure requires less computer storage and time than the procedure of computing a difference table and using equation (496).

If the value of df(t)/dt is needed in PEP and there is no tabulation for this function as there is for f(t), it is assumed that df(t)/dt = dg(t)/dt (numerical differentiation), where

$$h\frac{dg(t)}{dt} = y_1^{\,1} + p^2(3y_1^{\,2} + p^2\,(5y_1^{\,3} + p^2\,(7y_1^{\,4} + 9p^2 y_1^{\,5})))$$

$$- y_o^{\,1} - q^2(3y_o^{\,2} + q^2(5y_o^{\,3} + q^2(7y_o^{\,4} + 9q^2\, y_o^{\,5}))) \tag{503}$$

If the value of the second derivative is needed in PEP, it is assumed that $d^2f(t)/dt = d^2g(t)/dt$, where

$$h^2\frac{d^2g(t)}{dt} = p(6y_1^{\,2} + p^2(20y_1^{\,3} + p^2(42y_1^{\,4} + 72p^2 y_1^{\,5})))$$

$$+ q(6y_o^{\,2} + q^2(20y_o^{\,3} + q^2(42y_o^{\,4} + 72q^2 y_o^{\,5}))) \tag{504}$$

There are exceptions to the use of eighth difference interpolation in PEP: the nutation is interpolated from a table at half day intervals using fourth difference interpolation and the wobble and A1-UT1 are determined by second difference interpolation from 10 day interval tables. To document these cases and for the sake of completeness we present the formulas corresponding to those above in the case of second, fourth and sixth difference interpolation. The derivations are exactly similar to the one given above in the case of eight difference interpolation.

The second difference interpolation formulas are

$$g(t) = g(t_o + ph) = p(y_1^{\,1} + p^2\, y_1^{\,2}) + q(y_o^{\,1} + q^2 y_o^{\,2})$$

$$y_i^1 = \frac{4}{3} f_i - \frac{1}{6} (f_{i+1} + f_{i-1})$$

$$y_i^2 = -\frac{1}{3} f_i + \frac{1}{6} (f_{i+1} + f_{i-1}) \tag{505}$$

The fourth difference interpolation formulas are

$$g(t) = g(t_o + ph) = p(y_1^1 + p^2(y_1^2 + p^2 y_1^3))$$

$$+ q (y_o^1 + q^2 (y_o^2 + q^2 y_o^3))$$

$$y_i^1 = \frac{23}{15} f_i - \frac{3}{10} (f_{i+1} + f_{i-1}) + \frac{1}{30} (f_{i+2} + f_{i-2})$$

$$y_i^2 = -\frac{7}{12} f_i + \frac{1}{3} (f_{i+1} + f_{i-1}) - \frac{1}{24} (f_{i+2} + f_{i-2})$$

$$y_i^3 = \frac{1}{20} f_i - \frac{1}{30} (f_{i+1} + f_{i-1}) + \frac{1}{120} (f_{i+2} + f_{i-2}) \tag{506}$$

The sixth difference interpolation formulas are

$$g(t) = g(t_o + ph) = p(y_1^1 + p^2(y_1^2 + p^2(y_1^3 + p^2 y_1^4)))$$

$$+ q(y_o^1 + q^2(y_o^2 + q^2(y_o^3 + q^2 y_o^4)))$$

$$y_i^1 = \frac{176}{105} f_i - \frac{57}{140} (f_{i+1} + f_{i-1}) + \frac{8}{105} (f_{i+2} + f_{i-2}) - \frac{1}{140} (f_{i+3} + f_{i-3})$$

$$y_i^2 = -\frac{7}{9} f_i + \frac{23}{48} (f_{i+1} + f_{i-1}) - \frac{1}{10} (f_{i+2} + f_{i-2}) + \frac{7}{720} (f_{i+3} + f_{i-3})$$

$$y_i^3 = \frac{19}{180} f_i - \frac{3}{40} (f_{i+1} + f_{i-1}) + \frac{1}{40} (f_{i+2} + f_{i-2}) - \frac{1}{360} (f_{i+3} + f_{i-3})$$

$$y_i^4 = -\frac{1}{252} f_i + \frac{1}{336} (f_{i+1} + f_{i-1}) - \frac{1}{840} (f_{i+2} + f_{i-2}) + \frac{1}{5040} (f_{i+3} + f_{i-3})$$

(507)

IX-B-2. Hermite Interpolation

Let f(t) be a function. Suppose that the point for which interpolation is desired lies between t_1 and t_2, and that we have f_1, f_1', f_1'', and f_2, f_2', f_2''. With these 6 items of data we can construct an interpolation polynomial of 5th degree:

$$f(t) = A_o + A_1(t-t_1) + A_2(t-t_1)^2 + \ldots + A_5(t-t_1)^5 \tag{508}$$

By differentiating twice and equating the three equations with f_1, f_1', f_1'' at t_1 and with f_2, f_2', f_2'' at t_2 the 6 A's can be found. Let

$$C_1 = f_2 - (f_1 + hf_1' + h^2 f_1''/2)$$

$$C_2 = f_2' - (f_1' + hf_1'')$$

$$C_3 = f_2'' - f_1'' \tag{509}$$

where $h = t_2 - t_1$ is the integration step size. Then the solutions are

$$A_5 = (h^2C_3/2 - 3hC_2 + 6C_1)/h^5$$

$$A_4 = (h^2C_3/2 - hC_2 - 5h^5A_5)/2h^4$$

$$A_3 = (C_1 - h^4A_4 - h^5A_5)/h^3$$

$$A_2 = f_1''/2$$

$$A_1 = f_1'$$

$$A_o = f_1 \tag{510}$$

The idea of using Hermite interpolation in PEP with the variable step size Nordsieck integration is due to W.B. Smith.

IX-C. Matrix Inversion and Solution

The normal equations arising from the maximum likelihood determination of the parameters (Section II) have the form

$$AX = B \tag{511}$$

where A is an nxn symmetric matrix and where X and B are nx1 column matrices. Only the lower diagonal half of A is kept in storage, so that only $n(n-1)/2$ rather than n^2 double precision words of memory are required.

There exist many techniques which simultaneously solve (511) for X and find the inverse of A. The Gauss-Jordan direct method was the best of the several with which we experimented. The crucial point was that it used the fewest number of computations and so had the least accumulation of round-off errors. This least number of arithmetic operations for an inversion is proportional to n^3.

The documentation of the Gauss-Jordan direct inversion and solution technique is contained in Ref. 30. To save storage the inversion and solution are done in place, that is, A and B are sent to the computer subroutine and A^{-1} and X are returned in the same locations. In finding the inverse and solution, Ref. 30 utilizes the following elementary operations:

(1) multiply a row by a constant

(2) interchange two rows

(3) add multiples of one row to others to zero out a given column except for the pivot element.

Because we have only a lower diagonal half of the symmetric matrix in storage, we do not interchange rows in the PEP routine, and we always choose the pivot elements to be on the diagonal. At each stage of the inversion and solution process the pivot element is chosen to be the largest still available diagonal element.

Use of the automatic scaling described in Section II-D allows very large matrices to be inverted accurately. Cleanup techniques are not needed. The largest matrix we have

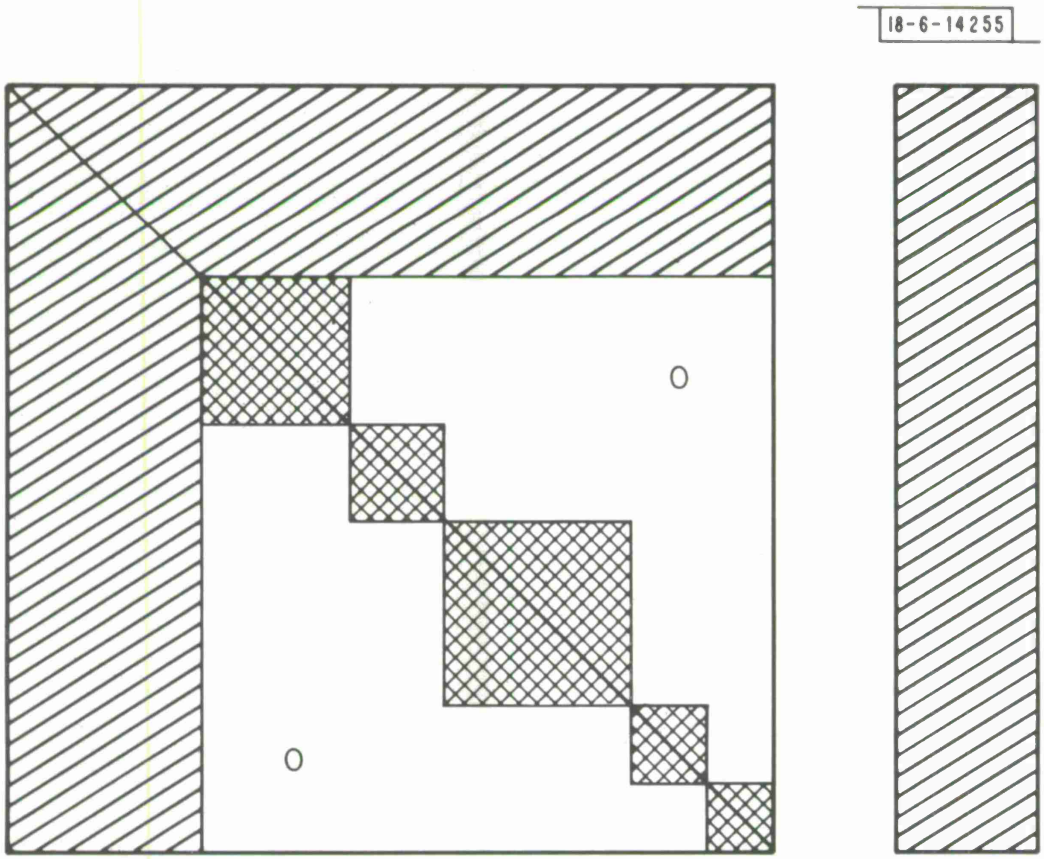

Fig. 15. Non-zero blocks in coefficient matrix of normal equations and right side of normal equations.

handled so far is about 400 x 400. The only limitation is computer time and core storage size. It is desirable to keep the matrix entirely in storage because we not only have to worry about inverting the matrix but forming it in the first place by incrementing with the results of each of the many throusands of observations.

The coefficient matrix of the normal equations looks like that in Fig. 15, so only the lower diagonal halves of the non-zero blocks need be in storage when the normal equations are formed, and the inverse and solution can be calculated by the block method. This refinement has not been programmed in PEP, but we are still able to handle large matrices because modern computers have large amounts of core memory.

IX-D. Legendre Polynomials and Functions

The Legendre polynomials $P_n(Z)$ and generalized Legendre functions $P_{nh}(Z)$ are defined in formulas (96)-(99). We now present recursive formulas for evaluating P_n and P_{nh} and their derivatives on a computer.

By Ref. 31, pp. 1004-10027, and Ref. 32, p. 223, we have for $n \geq 3$ and $h = 1, \ldots, n$

$$P_o(Z) = 1, \; P_1(Z) = Z, \; P_2(Z) = \frac{3}{2} Z^2 - \frac{1}{2}$$

$$P_3(Z) = \frac{5}{2} Z^3 - \frac{3}{2} Z$$

$$P_n(Z) = \frac{1}{n} \left[(2n-1) Z \, P_{n-1}(Z) - (n-1) P_{n-2}(Z) \right] \tag{512}$$

$$P_o'(Z) = 0, \; P_1'(Z) = 1, \; P_2'(Z) = 3Z, \; P_3'(Z) = \frac{15}{2} Z^2 - \frac{3}{2}$$

$$P_n'(Z) = P_{n-2}'(Z) + (2n-1) P_{n-1}(Z) \tag{513}$$

$$P_o''(Z) = 0, \; P_1''(Z) = 0, \; P_2''(Z) = 3, \; P_3''(Z) = 15Z$$

$$P_n''(Z) = P_{n-2}''(Z) + (2n-1) P_{n-1}'(Z) \tag{514}$$

$$P_{11}(Z) = (1-Z^2)^{1/2}, \quad P_{21}(Z) = 3Z\,(1-Z^2)^{1/2}$$

$$P_{22}(Z) = 3\,(1-Z^2)$$

$$P_{nh}(Z) = Z\,P_{n-1,h}(Z) + (n+h-1)\,(1-Z^2)^{1/2}\,P_{n-1,h-1}(Z) \tag{515}$$

$$P'_{11}(Z) = \frac{-Z}{(1-Z^2)^{1/2}}$$

$$P'_{21}(Z) = \frac{3-6Z^2}{(1-Z^2)^{1/2}}, \quad P'_{22}(Z) = -6Z$$

$$P'_{nh}(Z) = \frac{hZ}{(1-Z^2)}\,P_{nh}(Z) - \frac{(n+h)\,(n-h+1)}{(1-Z^2)^{1/2}}\,P_{n,h-1}(Z) \tag{516}$$

$$P''_{11}(Z) = \frac{-1}{(1-Z^2)^{3/2}}$$

$$P''_{21}(Z) = \frac{3Z}{(1-Z^2)^{3/2}}, \quad P''_{22}(Z) = -6$$

$$\begin{aligned} P''_{nh}(Z) = {} & \frac{h(1+Z^2)}{(1-Z^2)^2}\,P_{nh}(Z) + \frac{hZ}{(1-Z^2)}\,P'_{nh}(Z) \\ & - \frac{(n+h)(n-h+1)\,Z}{(1-Z^2)^{3/2}}\,P_{n,h-1}(Z) \\ & - \frac{(n+h)\,(n-h+1)}{(1-Z^2)^{1/2}}\,P'_{n,h-1}(Z) \end{aligned} \tag{517}$$

In the above $P_{no} = P_n$ and $P_{n-1,n} = 0$.

X. Mean Orbits

Certain parts of PEP make use of mean orbit formulas to generate the coordinates of various bodies if these coordinates are not needed to very high accuracy. Examples are:

i. Approximate sun coordinates are needed in making limb and phase corrections for lunar optical observations.

ii. Approximate sun coordinates are needed in processing satellite based look angle observations of the sun, except that if the satellite based observations are more accurate than $0\overset{\circ}{.}005$, exact interpolation from tables on magnetic tape is needed instead of mean sun formulas.

iii. Approximate asteroid or satellite coordinates are needed as functions of time if these bodies of small mass perturb a spacecraft.

We desire coordinates (x^1, x^2, x^3) referred to the mean equinox and equator of 1950.0. Mean orbital elements are often referred to the mean equinox and ecliptic of date, so that the coordinates (y^1, y^2, y^3) generated by applying the mean orbit formulas are also referred to the mean equinox and ecliptic of date. The relation between these coordinates is

$$\left.\begin{aligned} y^k &= \sum_{\ell=1}^{3} F_{k\ell}\, x^\ell \\ x^k &= \sum_{\ell=1}^{3} F_{\ell k}\, y^\ell \end{aligned}\right\} \qquad k = 1, 2, 3 \tag{518}$$

where the orthogonal matrix F is defined as follows. We have F = EP, where P is the precession matrix given in (75) and (76) transforming between coordinates referred to the mean equinox and equator of date and coordinates referred to the mean equinox and equator of 1950.0, and where E is the transformation matrix between coordinates referred to the mean equinox and ecliptic of date and coordinates referred to the mean equinox and equator of date. By Ref. 6, p. 27, we have

$$E = \begin{bmatrix} E_{11} & E_{12} & E_{13} \\ E_{21} & E_{22} & E_{23} \\ E_{31} & E_{32} & E_{33} \end{bmatrix} = \begin{bmatrix} 1 & 0 & 0 \\ 0 & \cos\epsilon_o & \sin\epsilon_o \\ 0 & -\sin\epsilon_o & \cos\epsilon_o \end{bmatrix} \tag{519}$$

where the mean obliquity ϵ_o of the ecliptic is given by (72). We therefore have

$$\left.\begin{aligned} F_{1k} &= P_{1k} \\ F_{2k} &= P_{2k} \cos \epsilon_o + P_{3k} \sin \epsilon_o \\ F_{3k} &= P_{3k} \cos \epsilon_o - P_{2k} \sin \epsilon_o \end{aligned}\right\} \quad k = 1,\ 2,\ 3 \tag{520}$$

Taylor expansions for the F_{1k} ($k = 1, 2, 3$) are given by the first three equations in (78) in terms of the time τ measured in 10,000 ephemeris days from the epoch 1950.0 (J.E.D. 2433282.423). Treating the coefficients in (72) as exact we in addition have

$$\begin{aligned} \sin \epsilon_o = {} & 0.3978811865927521 - 5.70513893192403 \times 10^{-4}\tau \\ & - 1.8312087506169 \times 10^{-9}\tau^2 + 1.652267540061 \times 10^{-10}\tau^3 \\ & + 4.45783951328 \times 10^{-15}\tau^4 - 2.36469209 \times 10^{-19}\tau^5 \\ \cos \epsilon_o = {} & 0.9174369522509674 + 2.47424898500217 \times 10^{-5}\tau \\ & - 1.3133571740992 \times 10^{-9}\tau^2 - 7.173527734648 \times 10^{-11}\tau^3 \\ & + 1.02732897621 \times 10^{-14}\tau^4 + 3.29806267 \times 10^{-19}\tau^5 \end{aligned} \tag{521}$$

By (78), (520) and (521) we have

$$\begin{aligned} F_{21} = {} & 6.672379076707188 \times 10^{-3}\tau + 4.03140345445988 \times 10^{-7}\tau^2 \\ & - 4.9421227156709 \times 10^{-8}\tau^3 - 8.685948302421 \times 10^{-12}\tau^4 \\ & + 1.11902061670 \times 10^{-13}\tau^5 \end{aligned}$$

$$\begin{aligned} F_{22} = {} & 0.9174369522509674 + 2.47424898500217 \times 10^{-5}\tau \\ & - 2.04156730272966 \times 10^{-5}\tau^2 - 2.8443776398581 \times 10^{-9}\tau^3 \\ & + 7.513826113715 \times 10^{-11}\tau^4 + 1.75327407517 \times 10^{-14}\tau^5 \end{aligned}$$

$$\begin{aligned} F_{23} = {} & 0.3978811865927521 - 5.70513893192403 \times 10^{-5}\tau \\ & - 8.87742893170170 \times 10^{-6}\tau^2 - 2.0534553328574 \times 10^{-10}\tau^3 \\ & + 3.266231487901 \times 10^{-11}\tau^4 + 4.79023554313 \times 10^{-15}\tau^5 \end{aligned}$$

$$F_{31} = 6.08828576338671 \times 10^{-6}\tau + 7.11738284222153 \times 10^{-8}\tau^2 - 3.4836043645777 \times 10^{-11}\tau^3 - 9.238939614350 \times 10^{-14}\tau^4 - 1.72691125954 \times 10^{-16}\tau^5$$

$$F_{32} = -0.3978811865927521 + 5.70513893192403 \times 10^{-5}\tau - 1.67960985290526 \times 10^{-8}\tau^2 - 3.3710116720406 \times 10^{-11}\tau^3 + 1.616276978960 \times 10^{-13}\tau^4 + 7.61970380671 \times 10^{-16}\tau^5$$

$$F_{33} = 0.9174369522509674 + 2.47424898500217 \times 10^{-5}\tau - 9.41199405263501 \times 10^{-9}\tau^2 - 1.3793679110716 \times 10^{-11}\tau^3 + 6.983259897028 \times 10^{-14}\tau^4 + 3.21079987643 \times 10^{-16}\tau^5 \quad (522)$$

Expansions (78) and (522) have 13 place accuracy 30 years away from the epoch 1950.0 and 9 decimal place accuracy 300 years away from the epoch 1950.0. They were generated by Amanda Rasinski and L. Mondshein using the IBM FORMAC computer language.

The mean elliptic orbital elements which could be given for a body are

a = semi-major axis

e = eccentricity

I = inclination

Ω = longitude (if ecliptic elements) or right ascension (if equatorial elements) of ascending node

ω = argument of pericenter

M = mean anomaly .

These 6 quantities are supposedly given as polynomials in time t. If we had constant elliptic orbital elements (a, e, I, Ω, ω, M_o) we would use the relation

$$M = M_o + \mu^{1/2} a^{-3/2}(t-t_o) \quad (523)$$

where M_o is the mean anomaly at an initial time t_o and where μ is the gravitational constant times the mass of the central body augmented by the mass of the given body. Given M, the eccentric anomaly ξ is determined by solving Kepler's equation

$$M = \xi - e \sin\xi \tag{524}$$

by iteration. The position coordinates (z^1, z^2, z^3) of the body in a reference frame with z^1 axis pointed from the central body towards periapsis, with z^2 axis in the orbital plane normal to the z^1 axis along the velocity vector at periapsis and with z^3 axis completing the right system are

$$\begin{aligned} z^1 &= a(\cos\xi - e) \\ z^2 &= \sqrt{1 - e^2}\ \sin\xi \\ z^3 &= 0 \end{aligned} \tag{525}$$

The transformation to the reference frame (y^1, y^2, y^3) relative to which the Euler angles (I, Ω, ω) are defined is

$$y^k = \sum_{j=1}^{3} D_{k\ell}\, z^\ell , \qquad k = 1, 2, 3 \tag{526}$$

where the orthogonal matrix D is defined by (287). See Ref. 12, pp. 1-25.

Formulas for the velocity can be derived from (524), (525) and (526) remembering that the orbital elements are functions of time. If (y^1, y^2, y^3) are not referred to the mean equinox and equator of 1950.0 and it is necessary to apply the transformation (518), the time derivatives of F could be ignored.

The mean orbital elements of the sun relative to the earth-moon barycenter referred to the mean equinox and ecliptic of date are by Ref. 6, p. 98,

$$\begin{aligned} a &= 1.00000023 \text{ astronomical units} \\ e &= 0.01675104 - 1.1444 \times 10^{-9} t - 9.4 \times 10^{-17} t^2 \\ I &= 0\overset{\circ}{.}0 \\ \Omega &= 0\overset{\circ}{.}0 \\ \omega &= 281\overset{\circ}{.}220833 + 0\overset{\circ}{.}0000470684t + 3.39 \times 10^{-13} t^2 + 7\overset{\circ}{.}0 \times 10^{-20} t^3 \\ M &= 358\overset{\circ}{.}475845 + 0\overset{\circ}{.}9856002670t - 1\overset{\circ}{.}12 \times 10^{-13} t^2 - 7\overset{\circ}{.}0 \times 10^{-20} t^3 \end{aligned}$$

where t is measured in days from the epoch 1900 January 0.5 (J.E.D. 2415020.0).

The mean elements of the moon relative to the earth for the same reference system and epoch are by Ref. 6, p. 107,

$$
\begin{aligned}
a &= 60.2665 \text{ earth radii} \\
e &= 0.054900489 \\
I &= 5^{\circ}.14539122 \ (\sin\tfrac{I}{2} = 0.044886967) \\
\Omega &= 259^{\circ}.183275 - 0^{\circ}.0529539222t + 1^{\circ}.557 \times 10^{-12}t^2 + 5^{\circ}.0 \times 10^{-20}t^3 \\
\omega &= 75^{\circ}.146281 + 0^{\circ}.1643580025t - 9^{\circ}.296 \times 10^{-12}t^2 - 3^{\circ}.1 \times 10^{-19}t^3 \\
M &= -63^{\circ}.895392 + 13^{\circ}.0649924465t + 6^{\circ}.889 \times 10^{-12}t^2 + 2^{\circ}.99 \times 10^{-19}t^3
\end{aligned}
$$

The mean moon position differs from the true moon position in the second decimal place (see Ref. 2, Appendix C).

Communications satellite positions could be predicted real time by a computer attached to a communications ground terminal by numerical integration with the moon and sun perturbations determined from the position coordinates generated internally by the mean moon and sun formulas. However, for accurate calculation of moon perturbations it would be necessary to evaluate a fair number of trigonometric terms from Brown's lunar theory, but nowhere near the ~ 1600 terms that exist. The usual way satellite positions are generated for communications antenna pointing are from mean satellite orbital elements or by interpolation from a table of satellite motion. However, there could be advantages to numerically integrating satellite motion if the necessary core memory would be available on the mini-computer attached to the communications terminal.

XI. ROTATION AND SHAPE OF A PLANET

XI-A. Rotation Matrix

Let (u^1, u^2, u^3) be a coordinate system fixed in a planet with origin at the center of mass of the planet and let (x^1, x^2, x^3) be a coordinate system referred to the mean equinox and equator (of the earth) of 1950.0 with origin at the center of mass of the planet. The transformation between these reference systems is given by

$$\left.\begin{aligned} u^k &= \sum_{\ell=1}^{3} A_{k\ell}\, x^\ell \\ x^k &= \sum_{\ell=1}^{3} A_{\ell k}\, u^\ell \end{aligned}\right\} \qquad k = 1, 2, 3 \tag{527}$$

This transformation is used in PEP in calculating the effect of planet gravitational potential harmonics on a spacecraft and in calculating the coordinates of a spot on a planet (such as a Viking lander on Mars) relative to the center of mass of the planet.

We derive a first approximation to the matrix A by assuming that (1) the axis of planetary rotation is fixed in the planet, (2) the axis of rotation is fixed in inertial space, and (3) the planet rotates at a constant angular rate ω about the axis of rotation. Let α be the angle between the ascending node of the equator of the planet on the (x^1, x^2) plane and the x^1 axis measured along the (x^1, x^2) plane; let δ be the angle between the equatorial plane and the (x^1, x^2) plane; and let Ψ be the angle measured from the ascending node along the equator to a reference point on the equator,

$$\Psi = \omega(t - t_o) + \Psi_o \tag{528}$$

Then in terms of these Euler angles we have [see (287) and note that $A = D^t$]

$$A_{11} = \cos\alpha \cos\Psi - \sin\alpha \sin\Psi \cos\delta$$

$$A_{12} = \sin\alpha \cos\Psi + \cos\alpha \sin\Psi \cos\delta$$

$$A_{13} = \sin\Psi \sin\delta$$

$$A_{21} = -\cos\alpha \sin\Psi - \sin\alpha \cos\Psi \cos\delta$$

$$A_{22} = -\sin\alpha \sin\Psi + \cos\alpha \cos\Psi \cos\delta$$

$$A_{23} = \cos\Psi \sin\delta$$

$$A_{31} = \sin\alpha \sin\delta$$

$$A_{32} = -\cos\alpha \sin\delta$$

$$A_{33} = \cos\delta \tag{529}$$

If α_o and δ_o are the right ascension and declination referred to the mean equinox and equator of 1950.0 of the point on the celestial sphere towards which the axis of rotation of the planet is directed, we have

$$\alpha = 90^o + \alpha_o$$
$$\delta = 90^o - \delta_o \tag{530}$$

By Ref. 33 the pole of Mercury is perpendicular to the orbital plane of 1950.0,

$$\alpha_o = 280\overset{o}{.}866$$
$$\delta_o = 61\overset{o}{.}393 \tag{531}$$

The rotation period is

$$2\pi/\omega = 58.6462 \text{ days} \tag{532}$$

The zero meridian on Mercury is defined to contain the intersection of the planet surface with the Sun-Mercury line at the first perihelion in 1950 (JED 2433392.63). The Sun-Mercury vector on that date in astronomical units referred to the mean equinox and equator of 1950.0 is

$$\vec{R}_{ps} = (0.0718102555,\ 0.2665961856,\ 0.1353805375) \tag{533}$$

where the ephemeris used was our Run 273, which was based on a fit to inner planet radar data 1964-1968 and U.S. Naval Observatory meridian circle data 1950-1968.

Let $\hat{P}$ be the unit vector along the pole of rotation,

$$\hat{P} = (\cos \alpha_o \cos \delta_o, \sin \alpha_o \cos \delta_o, \sin \delta_o) \tag{534}$$

Let $\vec{R}_o$ be a vector with origin at the center of the planet which passes through the zero meridian of the planet at time t_o, $\vec{R}_o = -\vec{R}_{ps}$ in the case of Mercury. The unit vector pointing along the ascending node of the planet's equator on the earth's equator of 1950.0 is

$$\hat{M} = (-\sin \alpha_o, \cos \alpha_o, 0) \tag{535}$$

The projection of $\vec{R}_o$ on the equator of the planet is

$$\vec{S}_o = \vec{R}_o - (\vec{R}_o \cdot \hat{P})\hat{P} \tag{536}$$

and the angle Ψ_o between $\vec{M}$ and $\vec{S}_o$ is given by

$$\begin{aligned} \sin \Psi_o &= \pm \frac{|\hat{M} x \vec{S}_o|}{|\hat{M}|\,|\vec{S}_o|} \\ \cos \Psi_o &= \frac{\hat{M} \cdot \vec{S}_o}{|\hat{M}|\,|\vec{S}_o|} \end{aligned} \tag{537}$$

where the + sign is used if the x^3 component of $\vec{S}_o$ is positive and where the - sign is used if the x^3 component of $\vec{S}_o$ is negative. By equations (532) through (537) we have for Mercury at the epoch t_o = JED 2433392.63

$$\Psi_o = 246^o.8727 \tag{538}$$

By Ref. 33 the pole of Venus is defined by

$$\alpha_o = 273.^{\circ}0$$

$$\delta_o = 66.^{\circ}0 \tag{539}$$

and the retrograde rotation period is

$$2\pi/\omega = -243.0 \text{ days} \tag{540}$$

The meridian through the earth-Venus vector of 20.0 June 1964 (JED 2438566.5) is defined to be at east longitude 320°. The components of this vector in astronomical units referred to the mean equinox and equator of 1950.0 are

$$\vec{R}_{pe} = (0.00805653705,\ 0.26903193997,\ 0.10659387010) \tag{541}$$

This is the geometric vector (not corrected for light time) and was calculated using Brown lunar theory for the Moon's orbit and the Venus and earth-moon barycenter orbits arising from our Run 311, which was based on a fit to inner planet radar data 1964-1969 and U.S. Naval Observatory meridian circle data 1950-1968. Using Eqs. (534) to (537) and (539) to (541) it can be calculated that the angle Ψ had the value

$$\Psi_o = -94.^{\circ}3869 + 320.^{\circ}0 = 225.^{\circ}6131 \tag{542}$$

on JED 2438566.5.

Formulas (529) are still valid in the case that the axis of rotation is precessing with α_o and δ_o as referred to the mean equinox and equator of 1950.0 being expressed as functions of time. Now, in Ref. 7, pp. 554-555, the right ascensions and declinations of the poles of Mars and Jupiter are referred to the mean equinox and equator (of the earth) of date. Thus, the time variations of these angles (call them α_1, δ_1) contain the effect of the precessional motions of the equator of the earth, of the equinox and of the planet's pole. In the case of Mars we have

$$\begin{aligned}\alpha_1 &= 316.^{\circ}55 + 0.^{\circ}006750\ (t-1905.0)\\ &= 316.^{\circ}85375 + 0.^{\circ}006750\ (t-1950.0)\end{aligned}$$

$$\delta_1 = 52^\circ.85 + 0^\circ.003479\ (t-1905.0)$$
$$= 53^\circ.006555 = 0^\circ.003479\ (t-1950.0) \tag{543}$$

and in the case of Jupiter we have

$$\alpha_1 = 17^h\ 52^m\ 0^s.84 + 0^s.247\ (t-1910.0)$$
$$= 268^\circ.04467 + 0^\circ.001029167\ (t-1950.0)$$
$$\delta_1 = 64^\circ 33'34''.6 - 0''.60\ (t-1910.0) \tag{544}$$
$$= 64^\circ.55294 - 0^\circ.000166667\ (t-1950.0)$$

where t is measured in years.

To remove the effects of the precessional motions of the equator of the earth and the equinox we use the formulas (see Ref. 6, p. 327)

$$\alpha_o = \alpha_1 - (m + n \sin \alpha_1 \tan \delta_1)\ (t - t_o)$$
$$\delta_o = \delta_1 - (n \cos \alpha_1)\ (t - t_o) \tag{545}$$

where m and n are the annual rates of the general precessions in right ascension and declination, respectively,

$$m = 3^s.07234 + 0^s.00186T$$
$$n = 20''.0468 - 0''.0085T \tag{546}$$

with T measured in tropical centuries from 1900.0 and evaluated midway between t and t_o = 1950.0. We choose T = 0.63. (See Ref. 7, p. 531.)

Applying this correction in the case of Mars, we find

$$\alpha_o = 316^\circ.8538 - 0^\circ.001003\ (t - 1950.0)$$
$$\delta_o = 53^\circ.0066 - 0^\circ.000589\ (t - 1950.0) \tag{547}$$

where t is measured in years. The sidereal period of rotation of Mars is

$$2\pi/\omega = 24^h 37^m 22^s.6689 = 1.025956815972 \text{ days} \tag{548}$$

and on 1909 January 15.5 (Julian Date 2418322.0) the longitude of the zero meridian was

$$\Psi_o = 344^o.41 \tag{549}$$

See Ref. 7, p. 554.

Applying the correction (545) in the case of Jupiter we find

$$\alpha_o = 268^o.0447 - 0^o.000085\ (t - 1950.0)$$

$$\delta_o = 64^o.5529 - 0^o.000022\ (t - 1950.0) \tag{550}$$

where t is measured in years. On Jupiter, as on the sun, the visible equatorial region rotates more rapidly than the visible polar regions. We therefore do not discuss the rotation of the planet insofar as it effects the tesseral harmonics in the gravitational potential. For handling zonal harmonics we can ignore Ψ in (529) because only A_{31}, A_{32}, A_{33} are needed for zonal harmonics in (91), (103) and (104).

If there existed accurate observations of a Viking Mars lander, it would be necessary to generate the matrix A by numerically integrating the equations for the motion of Mars about its center of mass instead of using (529). The initial conditions and parameters involved in the orbital motion and rotation of Mars plus those for the earth orbital motion would have to be solved for in fitting to the data.

XI-B. Longitude and Latitude of Sub-Radar Point

A radar observation of a planet yields the round trip time delay and doppler shift of a radar wave reflected from the region immediately around the subradar point on the planet, that is, the point on the planet closest to the observing radar on the earth. In order to consider the effect of planet topography on the round trip time delay, we must calculate the planetary longitude and latitude of the subradar point.

Let $\vec{r}$ be a vector pointing from the receiving radar site at receiving coordinate time t_1 to the center of mass of the planet at reflecting coordinate time t_*. If ρ is the radius of the planet at the subradar point, we have

$$t_1 - t_* = \frac{|\vec{r}|}{c} - \frac{\rho}{c} \tag{551}$$

With the unit vector $\hat{P}$ along the axis of rotation of the planet being given by (534), the latitude of the subradar point is

$$\phi = \sin^{-1}\left(-\frac{\hat{P}\cdot\vec{r}}{|\vec{r}|}\right) \tag{552}$$

Let $\vec{R}_o$ be a vector pointing from the center of mass of the planet through the zero meridian at the initial epoch t_o for planetary rotation. For Mercury and Venus it is given by the negatives of the vectors (533) and (541), respectively, except that the reference meridian is not the zero one for Venus. We shall give a value for $\vec{R}_o$ for Mars below. Let $\vec{R}$ be a vector pointing from the center of mass of the planet to the zero meridian at time t_*. The angle that the planet has rotated from time t_o to time t_* is

$$\Psi_* = \omega\,(t_* - t_o) \tag{553}$$

The projections of $\vec{R}_o$ and $\vec{R}$ on the planet's equatorial plane are

$$\vec{S}_o = \vec{R}_o - (\vec{R}_o \cdot \hat{P})\,\hat{P}$$

$$\vec{S} = \vec{R} - (\vec{R} \cdot \hat{P})\,\hat{P} \tag{554}$$

The angle between $\vec{S}_o$ and $\vec{S}$ is Ψ_*, so that

$$\vec{S} = \frac{|\vec{S}|}{|\vec{S}_o|}\,(\cos\Psi_*\vec{S}_o + \sin\Psi_*\,\hat{P}\times\vec{S}_o) \tag{555}$$

The projection of $\vec{r}$ on the planet's equatorial plane is

$$\vec{s} = \vec{r} - (\vec{r}\cdot\hat{P})\,\hat{P} \tag{556}$$

and the longitude θ of the subradar point is defined by

$$\sin\theta = \pm \frac{|\vec{S} \times \vec{s}|}{|\vec{S}|\,|\vec{s}|}$$

$$\cos\theta = \frac{\vec{S}\cdot\vec{s}}{|\vec{S}|\,|\vec{s}|} \tag{557}$$

where the + sign is used if $\hat{P}\cdot\vec{s} > 0$ and where the - sign is used if $\hat{P}\cdot\vec{s} < 0$.

We now derive the vector $\vec{R}_o$ for Mars. We desire an epoch t_o in the present time rather than at 1909 January 15.5 as in (549). In 1971 Mars opposition occurred on 10 August. According to the "American Ephemeris and Nautical Almanac" for 1971 (Ref. 7), p. 325, the universal time of transit of the Martian zero meridian as seen from the center of the earth on 10 August 1971 (Julian Day Number 2441174) is $21^h 29^m.9$. The unit vector from the earth to Mars at that instant corrected for light time is

$$\hat{R}_{pe} = (0.72059342663,\ -0.57928406200,\ -0.38101848908) \tag{558}$$

and $\vec{R}_o = -\hat{R}_{pe}$. The ephemerides used were generated in our Run 311 (see discussion following (541)). By (547) the direction of the pole of Mars on 10 August 1971 referred to the mean equinox and equator of 1950.0 is given by

$$\alpha_o = 316^\circ.832$$

$$\delta_o = 52^\circ.994 \tag{559}$$

By (534) to (537), (558) and (559) we then have that the angle Ψ at the subradar point of the vector $\hat{R}_{pe}$ is

$$\Psi_o = 94^\circ.1753 \tag{560}$$

The epoch t_o for use in (528) and (553) is JED 2441174.3940772, which is 10 August 1971, $21^h\ 29^m.9$ UT corrected for ET-UT= $41^s.78$ (ET ≡CT) and for the earth-to-Mars light time of $187^s.51$ sec.

The longitude θ resulting from the above formulas is measured positive to the east. The IAU convention for Mercury and Mars is to measure longitude positive to the west, so we must replace θ for these planets by $360^\circ - \theta$. However, the IAU

system on Venus is measured positive to the east if the retrograde rotation axis is taken to be pointing to the north of the ecliptic as we assume. In the IAU system the planetary longitude of the subradar point as seen from the earth increases with time for Mercury, Venus and Mars.

XI-C. Planetary Shape

There are a number of models for planetary shape programmed in PEP to give the radius ρ of a planet as a function of the longitude and latitude (θ, ϕ) of the subradar point. Each model has unknown parameters which must be determined along with the orbital and other parameters when fitting to radar data.

The first model programmed in PEP was that of an ellipsoidal planet with 3 unequal axes and with center of shape offset from the center of mass. However, the surface topography resolution of the radar data has become such that this model is inadequate.

The next model programmed in PEP was that of a spherical harmonic expansion for the radius:

$$\rho = \rho_o + \sum_{n=1}^{N} \bar{\bar{C}}_{no} \bar{\bar{P}}_n (\sin\phi) + \sum_{n=1}^{M} \sum_{h=1}^{n} \left[\bar{\bar{C}}_{nh} \cosh\theta + \bar{\bar{S}}_{nh} \sinh\theta\right] \bar{\bar{P}}_{nh}(\sin\phi) \tag{561}$$

where the double bars over the coefficients $\bar{\bar{C}}_{nh}$, $\bar{\bar{S}}_{nh}$ and the Legendre polynomials $\bar{\bar{P}}_n$ and functions $\bar{\bar{P}}_{nh}$ denote normalization to 1. See (94) to (101) and note that the normalization coefficients in (101) are for normalization to 4π. The upper limit N in PEP is 20, and the upper limit M is 10.

The spherical harmonic expansion gives values for the shape of a planet even for parts of the planet where no data exists. In particular, planetary radar data is concentrated around the equator, between, say, latitudes $\phi_1 < 0$ and $\phi_2 > 0$. For Mercury and Venus the data will always be between the latitude limits $\pm 15^o$, whereas on Mars these limits are no more than $\pm 30^o$. Therefore, we programmed another planetary shape model in PEP utilizing a double Fourier series in the latitude strip ϕ_1 to ϕ_2. Specifically, we define

$$\bar{\phi} = 2\pi \left(\frac{\phi - \phi_1}{\phi_2 - \phi_1}\right) \tag{562}$$

and in the latitude strip $\phi_1 < \phi < \phi_2$ around the planet we write

$$\rho = \rho_o + \sum_{n=1}^{N} \left[A_n' \cos n\theta + B_n' \sin n\theta \right]$$

$$+ \sum_{n=1}^{N} \sum_{m=1}^{M} \left[A_{nm} \cos n\theta \cos m\overline{\phi} \right.$$

$$+ B_{nm} \cos n\theta \sin m\overline{\phi}$$

$$+ C_{nm} \sin n\theta \cos m\overline{\phi}$$

$$\left. + D_{nm} \sin n\theta \sin m\overline{\phi} \right]$$

$$+ A'' \cos \overline{\phi} + B'' \sin \overline{\phi} \tag{563}$$

The upper limit N is 20 in PEP, and the upper limit M is 1.

The degree of flattening of an ellipsoidal planet is

$$f = 1 - \frac{\text{polar radius}}{\text{equatorial radius}} \tag{564}$$

Let ρ_{oo} be the equatorial radius of the planet. By Ref. 6, p. 57, the radius ρ_o at latitude ϕ is given by

$$\rho_o = \rho_{oo} \sqrt{\frac{\cos^2\phi_* + (1-f)^4 \sin^2\phi_*}{\cos^2\phi_* + (1-f)^2 \sin^2\phi_*}} \tag{565}$$

where

$$\tan \phi = (1-f)^2 \tan \phi_* \tag{566}$$

In addition to the limited number of Fourier coefficients in (563) (i.e., N, M < ∞), we can solve for ρ_{oo} and f instead of ρ_o.

The individual Fourier or spherical harmonic coefficients in the models presented above have global sensitivities to topography. We next present a model of planetary shape for which the individual coefficients to be solved for are determined by the local topography.

Suppose we are given points $\vec{\sigma}_i$ $(i = 1, \ldots, n)$ which lie on the surface of the planet. Let the radius, longitude and latitude of the point $\vec{\sigma}_i$ be $(\rho_i, \theta_i, \phi_i)$. We presume that θ_i and ϕ_i are given and that ρ_i is to be determined by fitting to data. Of course, the ρ_i have specific values at each stage in the least squares iteration. We choose the points $\vec{\sigma}_i$ to be spread out in longitude and latitude or to be close together in longitude and latitude according to the accuracy, density and span of the data to which we are fitting and also according to any previous knowledge of the roughness of the planet.

We presume that we have defined triangles $\Delta_{i_1 i_2 i_3}$ with vertices $(\vec{\sigma}_{i_1}, \vec{\sigma}_{i_2}, \vec{\sigma}_{i_3})$ so that the polyhedron with the faces $\Delta_{i_1 i_2 i_3}$ is inscribed in that part of surface of the planet which contains all the subradar points of the time delay data to which we are fitting. By Ref. 34, p. 96, a point $\vec{\sigma}$ is in a triangle $\Delta_{i_1 i_2 i_3}$ only if

$$\vec{\sigma} = a_1 \vec{\sigma}_{i_1} + a_2 \vec{\sigma}_{i_2} + a_3 \vec{\sigma}_{i_3} \tag{567}$$

with

$$\sum_{j=1}^{3} a_j = 1, \qquad 0 \le a_k \le 1 \quad , \quad k = 1, 2, 3 \tag{568}$$

The numbers (a_1, a_2, a_3) are called the barycentric coordinates of a point in the triangle.

Suppose we are given a triangle Δ_{123} (the indices 1, 2, 3 could be any allowable indices i_1, i_2, i_3) with vertices $\vec{\sigma}_i$ $(i = 1, 2, 3)$ having radius, longitude and latitude $(\rho_i, \theta_i, \phi_i)$. Let us examine more closely the condition that a point $\vec{\sigma}$ with radius, longitude and latitude (ρ, θ, ϕ) lies in Δ_{123}. The cartesian coordinates of the point $\vec{\sigma}$ in a reference frame fixed in the planet are

$$\begin{aligned} u^1 &= \rho \cos\theta \cos\phi \\ u^2 &= \rho \sin\theta \cos\phi \\ u^3 &= \rho \sin\phi \end{aligned} \tag{569}$$

where we employ a right handed coordinate system with θ measured positive to the east. Let (u_i^1, u_i^2, u_i^3) be the cartesian coordinates of $\vec{\sigma}_i$. By (567) we must have

$$u^j = \sum_{i=1}^{3} a_i u_i^j \qquad j = 1, 2, 3 \tag{570}$$

where the a_i satisfy (568). Let us regard (570) as an equation in the unknown parameters (a_1, a_2, a_3). The determinant of the coefficient matrix (u_i^j) is

$$\begin{aligned} \det = {} & u_1^1 u_2^2 u_3^3 + u_2^1 u_3^2 u_1^3 + u_3^1 u_2^3 u_1^2 \\ & - u_3^1 u_2^2 u_1^3 - u_3^2 u_2^3 u_1^1 - u_3^3 u_1^2 u_2^1 \end{aligned} \tag{571}$$

and by Cramer's rule the solution for (a_1, a_2, a_3) is

$$\begin{aligned} a_1 &= \frac{1}{\det}\Big[u^1(u_2^2 u_3^3 - u_2^3 u_3^2) + u^2(u_2^3 u_3^1 - u_2^1 u_3^3) \\ &\qquad + u^3(u_2^1 u_3^2 - u_2^2 u_3^1)\Big] \\ a_2 &= \frac{1}{\det}\Big[u^1(u_1^3 u_3^2 - u_1^2 u_3^3) + u^2(u_1^1 u_3^3 - u_3^1 u_1^3) \\ &\qquad + u^3(u_1^1 u_3^2 - u_1^2 u_3^1)\Big] \\ a_3 &= \frac{1}{\det}\Big[u^1(u_1^2 u_2^3 - u_1^3 u_2^2) + u^2(u_1^3 u_2^1 - u_1^1 u_2^3) \\ &\qquad + u^3(u_1^1 u_2^2 - u_1^2 u_2^1)\Big] \end{aligned} \tag{572}$$

The point $\vec{\sigma}$ lies in Δ_{123} only if the (a_1, a_2, a_3) as given by (572) satisfy (568).

Suppose we have radar time delay measurement with the longitude and latitude of the subradar point being (θ, ϕ). How do we determine the radius ρ to the point in the inscribed polyhedron with triangular faces corresponding to this longitude and latitude? We first search through all the triangles to find the one which contains a point with this longitude and latitude. To see if a given triangle Δ_{123} contains (θ, ϕ), we calculate

(u^1, u^2, u^3) by (569) with $\rho = 1$. We then calculate the (a_1, a_2, a_3) by (572). However, since $\rho = 1$ is not the true value of ρ, let us denote the values resulting from (572) by $(\bar{a}_1, \bar{a}_2, \bar{a}_3)$. The longitude and latitude (θ, ϕ) correspond to a point in Δ_{123} only if

$$\bar{a}_i \geq 0 \qquad i = 1, 2, 3 \tag{573}$$

$$\text{at least one } \bar{a}_i > 0$$

If these conditions are satisfied, the radius ρ to the point (θ, ϕ) in the triangle Δ_{123} is

$$\rho = 1/(\sum_{i=1}^{3} \bar{a}_i) \tag{574}$$

Rather than randomly searching through all the triangles for the one which satisfies (573), we can first find the vertex $\vec{\sigma}_k$ which has longitude and latitude (θ_k, ϕ_k) lying closest to (θ, ϕ) and then examine condition (573) for each triangle which has $\vec{\sigma}_k$ as a vertex. If none of these triangles contains a point corresponding to (θ, ϕ), we then pick the vertex $\vec{\sigma}_\ell$ in the remaining triangles which has longitude and latitude lying closest to (θ, ϕ) and examine conditions (573) for each triangle which has $\vec{\sigma}_\ell$ as a vertex, etc.

The fact that the vertices $\vec{\sigma}_i$ have to be judiciously chosen to match the data and the roughness of the planet make the inscribed polyhedron model more difficult to set up than the spherical harmonic or Fourier series models. However, it has the virtue of being a local rather than a global topography model. The inscribed polyhedron must be convex for the algorithms presented above to be valid.

If we decide to increase the number of triangles, we could use the method of barycentric subdivision in which each triangle Δ_{123} is subdivided into 6 triangles. In Fig. 16 we have created 4 new vertices, where

$$\vec{\sigma}_{(i,j)} = \frac{1}{2}\vec{\sigma}_i + \frac{1}{2}\vec{\sigma}_j \qquad i < j, \quad i, j = 1, 2, 3$$

$$\vec{\sigma}_{(1, 2, 3)} = \frac{1}{3}\vec{\sigma}_1 + \frac{1}{3}\vec{\sigma}_2 + \frac{1}{3}\vec{\sigma}_3$$

See Ref. 34, p. 138. The 6 sub-triangles of the given triangle are easily read off from Fig. 16. As we continually subdivide the inscribed polyhedron with the new vertices being put on the surface of the planet rather than in the triangle from which they came (which original triangle had its vertices on the planet's surface), then the inscribed polyhedron will approach closer and closer to the planet's surface in the sense that the radius to a point on the inscribed polyhedron with given longitude and latitude will approach the radius to the planet's surface with that longitude and latitude. However, the area of the inscribed polyhedron will not necessarily approach the area of the planet's surface; see Ref. 35, p. 25.

The inscribed polyhedron model of planetary shape is not coded in PEP. If it were coded, it could perhaps be improved by altering formula (574) for the radius to take account, in some way, of the fact that the radar energy is reflected from a region around the subradar point and not just from the subradar point itself.

The effect of planet radius ρ on round trip radar time delay is given by (226). The partial derivatives of time delay with respect to the parameters in the various models for ρ given in this section are easily derived. If the number of spherical harmonic or Fourier coefficients are increased, the partial derivatives of time delay with respect to the lower order coefficients remain unchanged. However, if the number of coefficients ρ_i in the inscribed polyhedron model are increased by subdivision of the triangular faces, then the partial derivatives with respect to the old coefficients do change. This is a property characteristic of a local rather than a global model. Of course, the partial derivatives of time delay with respect to radii ρ_i of vertices which are not on the triangle containing the subradar point are zero.

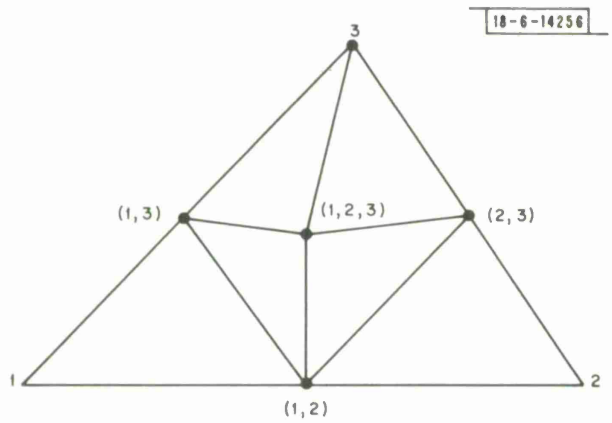

Fig. 16. Barycentric subdivision of a triangle.

References

1. M. E. Ash, "Generation of Planetary Ephemerides on an Electronic Computer," M.I.T. Lincoln Laboratory Technical Report 391 (2 June 1965) DDC No. 629130.

2. M. E. Ash, "Generation of the Lunar Ephemeris on an Electronic Computer," M.I.T. Lincoln Laboratory Technical Report 400 (24 August 1965) DDC No. 629047.

3. M. J. Tausner, "General Relativity and its Effect on Planetary Orbits and Interplanetary Observations," M.I.T. Lincoln Laboratory Technical Report 425 (7 October 1966) DDC No. AD-650730.

4. A. M. Mood and F. A. Graybill, Introduction to the Theory of Statistics, McGraw-Hill, New York (1963).

5. H. Cramèr, Mathematical Methods of Statistics, Princeton University Press, Princeton, New Jersey (nineth printing, 1961).

6. Explanatory Supplement to the Ephemeris, H. M. Nautical Almanac Office, London (1961).

7. American Ephemeris and Nautical Almanac, published yearly by the U.S. Government Printing Office, Washington, D. C. (page numbers refer to the Ephemeris for the Year 1972).

8. M. E. Ash, I. I. Shapiro and W. B. Smith, "The System of Planetary Masses," Science 174 (1971) pp. 551-556.

9. M. E. Ash, D. B. Campbell, R. B. Dyce, R. P. Ingalls, G. H. Pettengill and I. I. Shapiro, "Astronomical Constants from Analysis of Inner-Planet Radar Data," Bulletin of the American Astronomical Society 3 (1971) p. 474.

10. E. M. Gaposchkin and K. Lambeck, "1969 Smithsonian Standard Earth (II)," Smithsonian Astrophysical Observatory Special Report 315 (18 May 1970).

11. V. Foch, The Theory of Space Time and Gravitation, Pergamon Press, New York (1969).

12. D. Brouwer and G. M. Clemence, Methods of Celestial Mechanics, Adademic Press, New York and London (1961).

13. G. M. R. Winkler, R. G. Hall and D. B. Percival, "The U.S. Naval Observatory Clock Time Reference and the Performance of a Sample of Atomic Clocks," Metrologia 6 (1970) pp. 126-134.

14. E. W. Woolard, "Theory of the Rotation of the Earth Around its Center of Mass," Astronomical Papers Prepared for the Use of the American Ephemeris, Vol XV,

Part I, U. S. Government Printing Office, Washington, D. C. (1953).

15. I. I. Mueller, Spherical and Practical Astronomy as Applied to Geodesy, Frederick Ungar Publishing Co., New York (1969).

16. E. W. Woolard and G. M. Clemence, Spherical Astronomy, Academic Press, New York and London (1966).

17. J. Lieske, "Expressions for the Precession Quantities and Their Partial Derivatives," Jet Propulsion Laboratory Technical Report 32-1044 (15 June 1967).

18. H. Goldstein, Classical Mechanics, Addison-Wesley, Cambridge, Mass. (1950).

19. W. M. Kaula, Theory of Satellite Geodesy, Blaisdell Publishing Co., Waltham, Mass. (1966).

20. R. Courant and D. Hilbert, Methods of Mathematical Physics, Vol I, Interscience, New York (1953).

21. J. Lorell, "Lunar Orbiter Gravity Analysis," The Moon 1 (1970) pp. 190-231.

22. P. R. Escobal, Methods of Astrodynamics, John Wiley & Sons, New York (1968).

23. R. Deutsch, Orbital Dynamics of Space Vehicles, Prentice Hall, Englewood Cliffs, N. J. (1963).

24. "ESPOD Mathematical and Subroutine Description," Technical Documentary Report No. ESD-TRD-64-395 (24 June 1964) of U. S. Air Force Electronic Systems Division documenting ESPOD orbit fitting computer program written by TRW Space Technology Laboratories.

25. I. I. Shapiro, "Effects of General Relativity on Interplanetary Time-Delay Measurements," M. I. T. Lincoln Laboratory Technical Report 368 (1964) DDC No. 614232.

26. "Description of the Six Inch Transit Circle," Publications of the U.S. Naval Observatory, Vol. XVI, Pt. II, Washington (1950).

27. A. Nordsieck, "On Numerical Integration of Ordinary Differential Equations," Math. of Comp. 16 (1962) pp. 22-49.

28. W. B. Smith, "Numerical Integration of Differential Equations by Three Methods - Equations for, Descriptions of Computer Routines, Discussion of Results," M. I. T. Lincoln Laboratory Technical Note 1968-31 (21 August 1968) DDC No. AD674598.

29. F. B. Hildebrand, Introduction to Numerical Analysis, McGraw-Hill, New York (1956).

30. A. Orden, "Matrix Inversion and Related Topics by Direct Methods" in Mathematical Methods for Digital Computers, edited by A. Ralston and H. S. Wilf, John Wiley & Sons, New York and London (1962) pp. 39-55.

31. I. S. Gradshteyn and I. M. Ryzhik, Tables of Integrals, Series and Products, Academic Press, New York (1965).

32. P. D. Ritger and N. S. Rose, Differential Equations with Applications, McGraw-Hill, New York (1967).

33. Proceedings of the 14th General Assembly of the International Astronomical Union, Reidel Publishing Co., Dordrecht (1971), p. 128.

34. A. H. Wallace, An Introduction to Algebraic Topology, Pergamon Press, London (1957).

35. L. Cesari, Surface Area, Annals of Mathematics Studies Number 35, Princeton University Press, Princeton, New Jersey (1956).

DOCUMENT CONTROL DATA – R&D

(Security classification of title, body of abstract and indexing annotation must be entered when the overall report is classified)

1. ORIGINATING ACTIVITY *(Corporate author)* Lincoln Laboratory, M.I.T.	2a. REPORT SECURITY CLASSIFICATION Unclassified 2b. GROUP None
3. REPORT TITLE Determination of Earth Satellite Orbits	
4. DESCRIPTIVE NOTES *(Type of report and inclusive dates)* Technical Note	
5. AUTHOR(S) *(Last name, first name, initial)* Ash, Michael E.	
6. REPORT DATE 19 April 1972	7a. TOTAL NO. OF PAGES 266 7b. NO. OF REFS 37
8a. CONTRACT OR GRANT NO. F19628-70-C-0230 b. PROJECT NO. 63430F c. d.	9a. ORIGINATOR'S REPORT NUMBER(S) Technical Note 1972-5 9b. OTHER REPORT NO(S) *(Any other numbers that may be assigned this report)* ESD-TR-72-85
10. AVAILABILITY/LIMITATION NOTICES Approved for public release; distribution unlimited.	
11. SUPPLEMENTARY NOTES None	12. SPONSORING MILITARY ACTIVITY Air Force Systems Command, USAF

13. ABSTRACT

The formulas used in a computer program to fit earth satellite orbits to data are documented. The areas covered are (1) iterative method of determining maximum likelihood parameter estimates; (2) units are coordinate systems; (3) motion of the earth about its center of mass; (4) equations for earth satellite motion and partial derivatives of this motion with respect to parameters; (5) theoretical values and partial derivatives of theoretical values of ground based (radar or radio transponder, look angles, long baseline interferometer) and satellite based (radar, look angles) observables; and (6) numerical techniques such as numerical integration, polynomial interpolation and matrix inversion. Observations of the sun, moon, planets and stars are also discussed.

14. KEY WORDS

earth satellite orbits
Planetary Ephemeris Program (PEP)
LES-6
LES-8
LES-9